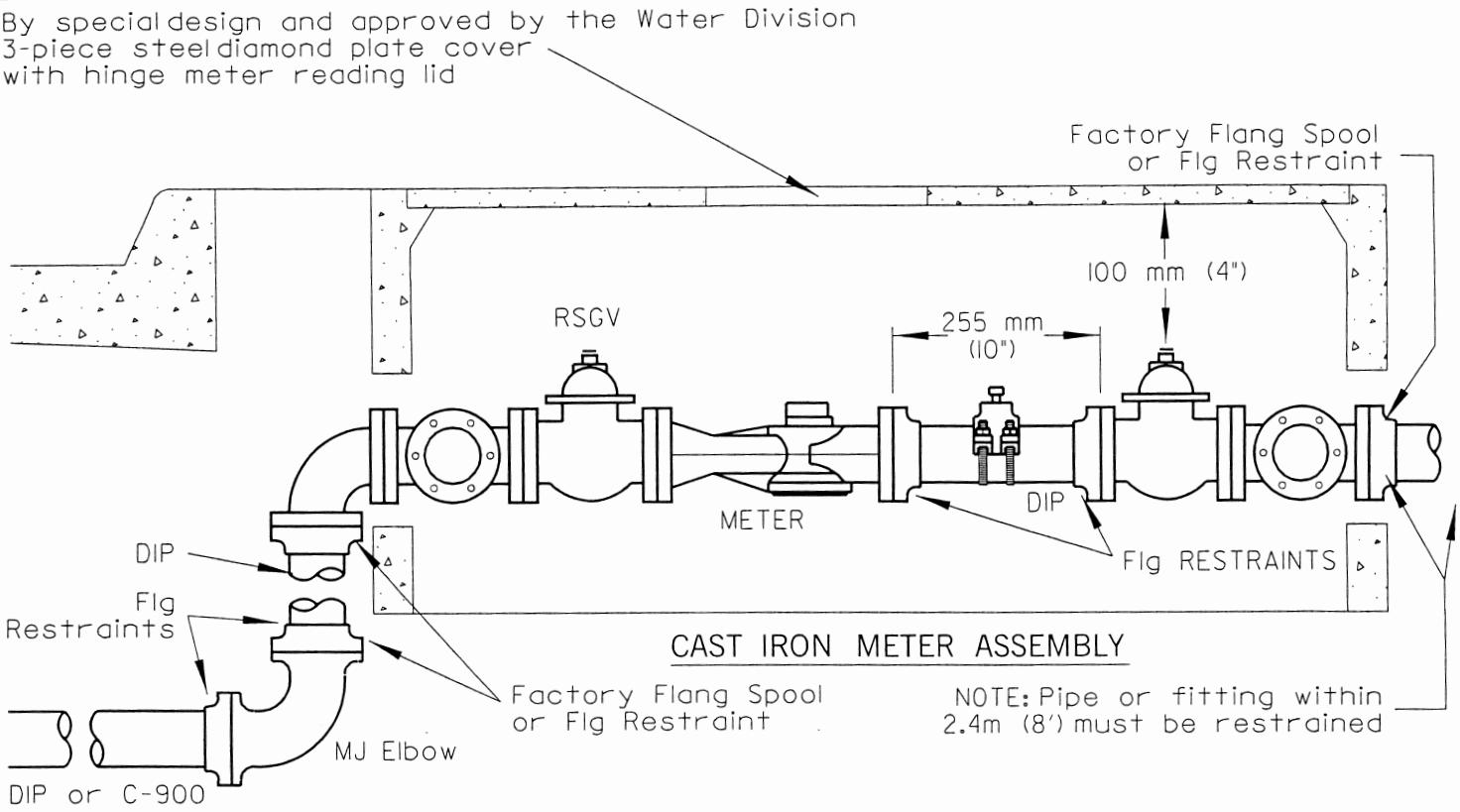


CAST IRON METER ASSEMBLY

NOTE: Pipe or fitting within 2.4m (8') must be restrained

TO WATER MAIN
SEE DRAWING NO. 414
FOR INSTALLING ON NEW
OR EXISTING MAIN 1

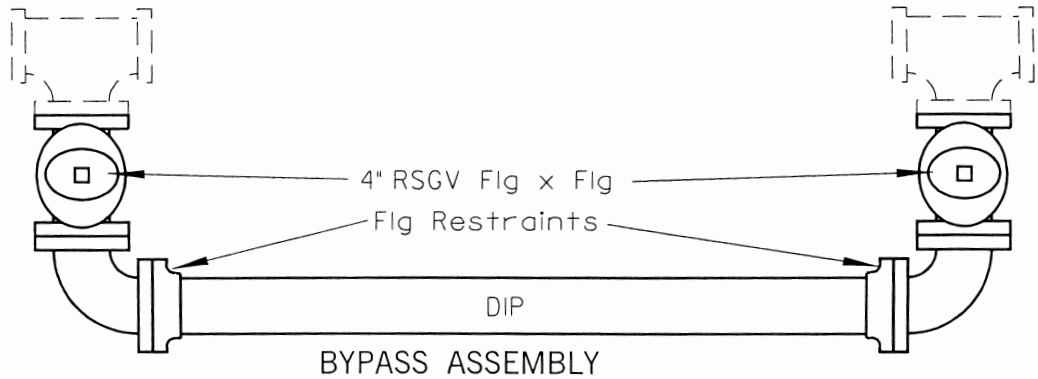


BYPASS ASSEMBLY

NOTES:

1. All vavles 3" through 12" will be RSGV (Resiliant Seat Gate Valves). Valves shall be Mueller or approved equal with Non-rising Stem, with either 2" operating nut or hand wheel
2. Use brass bolts on meter flanges. All other bolts and nuts are to be low carbon steel and conform to ASTM A 307 GRADE.
3. Connections between Meter and Backflow Assembly are not permitted.

# Drawing No. 410–6

| MARK | REVISIONS | APPR. | DATE |
|---|---|---|---|
| 1 | Corrected Drawing Reference | KM | 9/07 |
| ---- | Drawing 410 split into 410-4 & 410-6 for separate 4" & 6" | KM | 9/07 |

# CITY OF LOMPOC

Utility Department, Water Division

6" SERVICE INSTALLATION
w/By–Pass

Resolution No. 5008(02)

SHEET 1 OF 1