ECONOMIC & COMMUNITY DEVELOPMENT DEPARTMENT

PLANNING DIVISION MEMORANDUM

DATE: August 11, 2016

TO: Joe Gibson, Meridian Consultants
Chris Hampson, Meridian Consultants

FROM: Cherridah A. Weigel, Development Services Assistant
Planning Division

SUBJECT: Responses from DEIR (06/24 thru 08/15) for the
LVPRPF Motorsports Park Project (CUP 14-04)

Attached are responses received to date:

- 06/28/2016 – Graybill, Paul & Jacqueline
- 07/12/2016 – Emerson, Michael
- 07/13/2016 – CA DOT, Division of Aeronautics
- 07/17/2016 – Nichols, Troy
- 07/19/2016 – Smith, Gregg
- 07/21/2016 – Lardy, Dale A.
- 07/21/2016 – Turocy, Daniel J
- 07/24/2016 – Evans, Rhys M
- 07/25/2016 – Zanella, Sandrine
- 07/26/2016 – Andersen, Michael
- 07/26/2016 – Hibbits, Art & Sherry
- 07/26/2016 – Ranard, Lauren
- 07/27/2016 – Gober, Mark
- 07/27/2016 – Jeszeck, Christine
- 07/27/2016 – Serpa, Jr., Lawrence V
- 07/29/2016 – Fasold, Walter
- 08/03/2016 – Jimenez, Anne
- 08/03/2016 – Norris, John G
- 08/04/2016 – Alderman, Judith
- 08/04/2016 – Castro, Steve
- 08/04/2016 – Darr, Patty
- 08/04/2016 – Gerald, Molly
- 08/04/2016 – Lompoc Resident
- 08/08/2016 – Baltierra, Maria L
- 08/08/2016 – Nasato, Jason
- 08/08/2016 – Weaver, Barry & Laurie
- 08/10/2016 – Blevins, Janet
- 08/10/2016 – Edward, Donald C

- 08/10/2016 – Wyckoff, Robert & Eileen
- 08/10/2016 – Hammons, Terry
- 08/10/2016 – SB Co Public Health Department; Environmental Health Services

C: Teresa Gallavan, Economic Development Director / Assistant City Manager
Mike Luther, City Engineer
Richard Fernbaugh, Aviation Administrator
Jennifer Davis, State of CA, Grants Manager
LVPRPF – John Linn, Carl Creel, Will Schuyler
CUP 14-04 project file

G:\COMDEV\Notes-current projects\Foundation projects\Motorsport Park @ Airport\EIR studies-sections\Comments on DRAFT EIR\2016.08.11 DEIR Comments trans to Meridian.docx

Weigel, Cherridah

From: Breese, Lucille
Sent: Tuesday, July 19, 2016 10:35 AM
To: Weigel, Cherridah
Subject: FW: Motorsports Park Environmental Impact Report

Here is another

From: silvertrike1@comcast.net [mailto:silvertrike1@comcast.net]
Sent: Tuesday, June 28, 2016 3:40 PM
To: Breese, Lucille
Cc: silvertrike1@comcast.net
Subject: Motorsports Park Environmental Impact Report

Ms. Breese.

The EIR concerning the motorsports facility seems complete and unbiased but having discussed this project with others from Stonebrook (my home), Glen Ellen, The Willows and the Airport, I have yet to find anyone in favor of such a project at the proposed location. Without exception residents nearby expressed concern (some vehemently) about noise, dust and air pollution and erosion of property values. As a former owner/operator of a flying service my concern would be dust and corruption blown in by a prevailing northwest wind especially during re-fueling and aircraft maintenance as well irritation to arriving and departing passengers. Also I understand the skydiving operation (a positive economic factor) would be forced to vacate.

Most of the people I talked to do not oppose the motorsports park idea (myself included), but NOT at this location in such close proximity to residential and other conflicting commercial areas. I would think such a venture would open the door for a class action lawsuit against Lompoc by nearby residents due to a reduction in property values. This venture would clearly have a lasting negative impact on many more citizens than the few who would benefit.

Sincerely,
Paul & Jacqueline Graybill
609 Northbrook Dr.
735-2186

RECEIVED

JUN 29 2016

Planning Division

Weigel, Cherridah

From: Breese, Lucille
Sent: Tuesday, July 19, 2016 10:34 AM
To: Weigel, Cherridah
Subject: FW: Motor Sports EIR

Here is one comment I received

From: Michael Emerson [mailto:michaelwemerson@hotmail.com]
Sent: Tuesday, July 12, 2016 2:08 PM
To: Breese, Lucille
Subject: Motor Sports EIR

I live in La Purisma Highlands at 2320 Carrizo and would like to complain that the EIR report generated for the city regarding the motor sports park is intentionally deceiving our city leaders.

The reports claim that a drag strip/motocross park less then 1 mile
from my front door will not impact my property. The report claims that my house has a constant ambient noise of 70dbs... The equivalant of a fright train constantly driving by... The report claims that because I live by train track and a 24/7 train noise, that a drag strip will not impact my life.

My problem is clear, but I will spell it out... The report is crazy for believing that my ambiant noice is any different then any other normal neighborhood. There is no train track. Yes we have planes that fly over head, but we don't live near LAX.

Please count me as a resident that does not want this project to move forward.

Sent from Outlook Mobile

RECEIVED

JUL 18 2016

Planning Division

DEPARTMENT OF TRANSPORTATION
DIVISION OF AERONAUTICS
P. O. BOX 942874, MS-40
SACRAMENTO, CA 94274-0001
PHONE (916) 654-4959
FAX (916) 653-9531
TTY 711
www.dot.ca.gov

Serious drought. Help save water!

RECEIVED

JUL 18 2016

Planning Division

July 13, 2016

Ms. Lucille Breese
City of Lompoc
Economic Development Department
Planning Division
100 Civic Center Plaza
Lompoc, California 93436

Dear Ms. Breese:

Re: Draft Environmental Impact Report for Lompoc Motorsports Project; SCH# 2015121005

The California Department of Transportation (Caltrans), Division of Aeronautics (Division), reviewed the above-referenced document with respect to airport-related noise and safety impacts and regional aviation land use planning issues pursuant to the California Environmental Quality Act (CEQA). The Division has technical expertise in the areas of airport operations safety, noise, and airport land use compatibility. We are a funding agency for airport projects and we have permit authority for public-use and special-use airports and heliports. The following comments are offered for your consideration.

The proposed project would allow development of a recreational motorsports facility on approximately 38 acres of land within the Lompoc Airport property boundary. The project site is located approximately 325 feet north of Lompoc Airport's, Runway 7/25 centerline. The project site is on airport property that would be developed with new, non-aeronautical land uses such as, off-highway vehicle areas, an oval dirt track, a hot rod drag racing strip with grandstands and pit areas, and other trail-riding areas. Several structures for customer services, meetings, concessions, storage, event seating, lighting, and restrooms along with new access and circulation roads, parking, and fencing are also planned for this project. Grandstand seating for 1,250 people, picnic and playground areas, as well as other viewing areas and concessions will be 75 feet from the north side airport taxiway.

In accordance with CEQA, Public Resources Code Section 21096, the California Airport Land Use Planning Handbook (Handbook) must be utilized as a resource in the preparation of environmental documents for projects within airport land use compatibility plan boundaries or if such a plan has not been adopted, within two miles of an airport. The Handbook is a resource that should be applied to all public use airports and is available on-line at http://dot.ca.gov/hq/planning/aeronaut/documents/alucp/AirportLandUsePlanningHandbook.pdf

Protecting people and property on the ground from the potential consequences of near-airport aircraft accidents is a fundamental land use compatibility-planning objective. While the chance of an aircraft injuring someone on the ground is historically quite low, an aircraft accident is a

high consequence event. To protect people and property on the ground from the risks of near-airport aircraft accidents, some form of restrictions on land use is essential. The two principal methods for reducing the risk of injury and property damage on the ground are to limit the number of persons in an area and to limit the area covered by occupied structures. The potential severity of an off-airport aircraft accident is highly dependent upon the nature of the land use at the accident site.

The Handbook identifies six airport safety zones based on risk levels. The project site appears to be within Safety Zone 5 and the Runway Protection Zone (RPZ) as defined in the Handbook. The RPZ is the most critical of the airport safety zones, considered to be at "very high risk" due to its proximity to the end of the runway. The Handbook generally recommends prohibiting all new structures within the RPZ. Just beyond the RPZ is the Inner Approach/Departure Zone, which is considered to be at "substantial risk." The RPZ together with the inner safety zones encompass 30 to 50 percent of the near-airport aircraft accident sites. The Handbook's basic compatibility policies for an RPZ state that parking lots and roads should be avoided and that uses on airport property be subject to Federal Aviation Administration (FAA) standards. Group recreational and stadium uses are generally prohibited in Safety Zone 5. These land use compatibility concerns must be thoroughly addressed through the environmental process.

The project site is adjacent to the runway environment and should meet airport design standards in accordance with FAA Advisory Circular 150/5300-13A - Airport Design. Since Lompoc Airport is part of the National Plan of Integrated Airport Systems and receives federal funds, it is required that use of land on airport or in the immediate vicinity of the airport be restricted to activities and purposes compatible with normal airport operations. The airport should also coordinate with the FAA to ensure compliance with their grant assurances.

The Advisory Circular 150/5300-13A, also contains guidance pertaining to land uses within the RPZ. The RPZ is further broken down into two areas: "The Central Portion of the RPZ" and "the Controlled Activity Area."

California Public Utilities Code (PUC) Section 21659 prohibits structural hazards near airports. Structures should not be at a height that will result in penetration of the airport imaginary surfaces. The FAA Advisory Circular 150/5370-2E "Operational Safety on Airports During Construction" should be incorporated into the project design in order to identify any permanent or temporary construction-related impacts (e.g. construction cranes, etc.) to the airport imaginary surfaces. This advisory circular is available at http://www.faa.gov. This proposed project will require submission of a Notice of Proposed Construction or Alteration (Form 7460-1) to FAA in accordance with Federal Aviation Regulation, Part 77 "Objects Affecting Navigable Airspace." Form 7460-1 is available on-line at https://oeaaa.faa.gov/oeaaa/external/portal.jsp and should be submitted electronically to the FAA.

Due to its proximity to the airport, the project site may be subject to aircraft overflights and subsequent aircraft-related noise impacts. Since communities vary greatly in size and character from urban to rural, the level of noise deemed acceptable in one community is not necessarily the same for another community.

Business and Professions Code Section 11010 and Civil Code Sections 1102.6, 1103.4, and 1353 address buyer notification requirements for lands around airports and are available on-line at http://www.leginfo.ca.gov/calaw.html. Any person who intends to offer subdivided lands, common interest developments and residential properties for sale or lease within an airport influence area is required to disclose that fact to the person buying the property.

PUC Section 21688 states that "no payments shall be made from the Aeronautics Account for expenditure on any airport or for the acquisition or development of any airport, if the department determines that the height restrictions around the airport are inadequate to provide reasonable assurance that the landing and taking off of aircraft at the airport will be conducted without obstruction or will be otherwise free from hazards." The airport-owner must have sufficient control over obstructions in the airspace in the vicinity of the airport to assure that height restrictions can be maintained. This control may be in the form of ownership of any land from which obstructions may rise, air navigation (avigation) easements to guarantee maintenance of restrictions, or height limitation or land use zoning which will prohibit obstructions which would violate the obstruction standards.

Land use practices that attract or sustain hazardous wildlife populations on or near airports can significantly increase the potential for wildlife-aircraft collisions. The FAA recommends that landfills, wastewater treatment facilities, surface mining, wetlands and other uses that have the potential to attract wildlife, be restricted in the vicinity of an airport. FAA Advisory Circular (AC) 150/5200-33B entitled "Hazardous Wildlife Attractants on or Near Airports" and AC 150/5200-34 entitled "Construction or Establishment of Landfills Near Public Airports" address these issues. For further information, please refer to the FAA website: http://www.faa.gov/airports/airport_safety/wildlife/. For additional information concerning wildlife damage management, you might also contact the United States Department of Agriculture, Wildlife Services, at (916) 979-2675.

In accordance with PUC Section 21676 *et seq.*, prior to the amendment of a general plan or specific plan, or the adoption or approval of a zoning ordinance or building regulation within the planning boundary established by the airport land use commission (ALUC), the local agency shall first refer the proposed action to the ALUC.

If the ALUC determines that the proposed action is inconsistent with the airport land use compatibility plan, the referring agency shall be notified. The local agency may, after a public hearing, propose to overrule the ALUC by a two-thirds vote of its governing body after it makes specific findings. At least 45 days prior to the decision to overrule the ALUC, the local agency's governing body shall provide to the ALUC and the Division a copy of the proposed decision and findings. The Division reviews and comments on the specific findings a local government intends to use when proposing to overrule an ALUC. The Division specifically looks at the proposed findings to gauge their relationship to the overrule. Also, pursuant to the PUC 21670 et seq., findings should show evidence that the local agency is minimizing "...the public's exposure to excessive noise and safety hazards within areas around public airports to the extent that these areas are not already devoted to incompatible uses."

In addition to submitting the proposal to the ALUC, it should also be coordinated with airport staff to ensure that the proposal will be compatible with future as well as existing airport operations.

The protection of airports from incompatible land use encroachment is vital to California's economic future. Lompoc Airport is an economic asset that should be protected through effective airport land use compatibility planning and awareness. Although the need for compatible and safe land uses near airports is both a local and State issue, airport staff, airport land use commissions and airport land use compatibility plans are key to protecting an airport and the people residing and working in the vicinity of an airport. Consideration given to the issue of compatible land uses in the vicinity of an airport should help to relieve future conflicts between airports and their neighbors.

The Draft Environmental Impact Report (DEIR) for this project contains an embedded Internet link to the City of Lompoc's webpage which lists environmental notices for projects that are open for public review. The DEIR is not listed or available for review on the webpage but the Notice of Preparation from last year is still posted there. Please be sure that the public has been given proper notice and a full review period required under CEQA for this project and its environmental document.

These comments reflect the areas of concern to the Division with respect to airport-related noise, safety, and regional land use planning issues. We advise you to contact our District 5 office concerning surface transportation issues.

Thank you for the opportunity to review and comment on this proposal. If you have any questions, please contact me at (916) 654-6223, or by email at philip.crimmins@dot.ca.gov.

Sincerely,

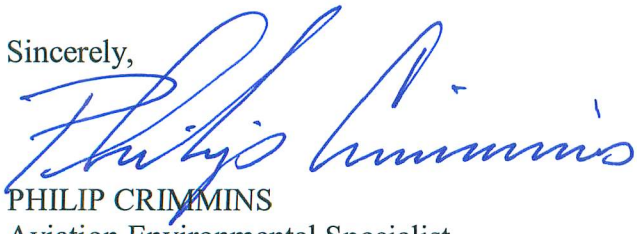

PHILIP CRIMMINS
Aviation Environmental Specialist

c: State Clearinghouse, Santa Barbara County ALUC, Lompoc Airport, FAA

Weigel, Cherridah

From: Breese, Lucille
Sent: Tuesday, July 19, 2016 12:59 PM
To: Weigel, Cherridah
Subject: FW: Motorsports Park

Another one

From: Troy Nichols [mailto:tnicho03@gmail.com]
Sent: Sunday, July 17, 2016 3:45 PM
To: Breese, Lucille
Subject: Motorsports Park

An interesting read.
As a non-degreed engineer with some background in/understanding of communications and signal/power levels, my conclusion is that processes used to develop the DEIR were meant to show the least possible impact.
To say there was manipulation involved is accusatory, so I'll refrain from such strong language. It IS completely fair to say the study was done with an intent to mislead by presenting technical data gathered with significant bias. The goal was to reach a desired data model and outcome.
Hmmm...then again, maybe 'manipulation' isn't too far off the mark.

Yes, I live close enough (West Barton/Glen Ellen) to be significantly impacted by this ear-sore. It seems as though the entities behind this park are trying to hide in plain sight, using (abusing) the rules/regs associated with the airport as cover. They know the truth about what they're aiming for: this park, in full operation will produce sounds levels much higher than what is shown in their study. The concentration of noise sources that will come together in the proposed motorsports park will result in offensive noise to anyone within ~1/4 to 1/2 mile. If you're any closer, tough luck. (and bring earplugs)
There are too many other gaping holes in this report.
- the safety factors (with the airport and aircraft)
- toxic product run-off (it WILL be there)
- re-forestation (and sustaining) costs

Is it possible we could be taxed to pay for the negative residuals of this project?
Nothing good will come of this.
For those who want to have a place to raise a little hell in their OHVs: Lompoc isn't even close to hell's address.
Move along and take this semi-controlled mayhem elsewhere.

The City Council will hopefully bring this to a 'peaceful' conclusion. (pun intended)

T. Nichols

RECEIVED

JUL 19 2016

Planning Division

Lucille Breese, AICP
City Of Lompoc
100 Civic Center Plaza
Lompoc, CA 93436

Dear Ms. Breese:

In reviewing the Draft EIR for the Motorsports Park, I find several areas to be inaccurate and incomplete. I believe this document should not be adopted by the city without major revision. Several areas fail to address my concerns. The following subjects have not been addressed or are not able to be mitigated resulting in an incomplete assessment of the proposed project.

1) The Noise Study says there is no noise issue to mitigate. This is inaccurate as their own data shows the project fails to satisfy the 2030 General Plan Noise Policy because it fails the following:
    a. Page N-9 of the 2030 General Plan noise element, policy 1.1 states "The City shall require each land use to maintain noise levels at their property line in compliance with City standards."
    b. Policy 2.3 states "The City shall minimize noise exposure in the vicinity of the Lompoc Airport by maintaining consistency with the adopted Lompoc Airport Master Plan."
    c. Policy 2.4 states "The City shall continue to enforce its Noise Ordinance to minimize noise conflicts between adjacent land uses. The Noise Ordinance establishes noise limits that cannot be exceeded at the property line."
2) The city will need to address issues raised by the Santa Barbara County Association of Governments (SBCAG) and the Federal Aviation Administration (FAA), as group recreation areas are "incompatible uses" for areas next to active runways after adopting the Draft ALUP.
3) And finally, per the DEIR, "the daily operational emissions generated by the proposed Project on a weekend motorsports event day cannot be feasibly mitigated to a less than significant level and the contribution of these emissions to the air quality within SCCAB is considered to be cumulatively considerable for this reason" (pg 4.2-31 of the DEIR.) This means operating the park will make air quality demonstrably worse and reduce the quality of life for all of the community.

Sincerely, GREGG SMITH
7/18/2016

RECEIVED
JUL 19 2016
Planning Division

Lucille Breese
City of Lompoc

Re: EIR motorsports park

Dear Ms. Breese,

The Noise study misleads the readers. They say there is no noise issue to mitigate is false and misleading. In other words, this report is design to deceive the truth and the noise issue. Allan Hancock had a similar noise report, and after they open their open air gun range all hell broke loose because the noise was extremely loud. I had to close all my windows and turn the TV sound to a high volume and I could not block out the noise. When I review the Lompoc City Noise ordinance, it is in direct conflict with this motor park. Lawyers love suing cities like Lompoc who do not follow their ordinances, and when they fail to apply them fairly to all projects.

If the city approves this project, I will see you in court!

Sincerely,

Dale A. Lardy
2836 Lewis Drive
Lompoc, CA 93436
7-21-16

RECEIVED

JUL 25 2016

Planning Division

July 21, 2016

City of Lompoc
100 Civic Center Drive
Lompoc, CA 93436
Lucille T. Breese, AICP Planning Manager

Dear Lucille Breeze, Project Manager

I can't believe that I have to write another letter to express my total opposition to having a raceway built **inside the city limits of Lompoc**. The Idea of building a raceway in the center of Lompoc's residential community is ludicrous and outrageous. Because of the noise pollution and human factor, raceways belong well beyond the city limits of any city. This raceway proposal will truly intrude on the peace and quiet that our community deserves.

By the fact that realtors will require disclosures to any potential property buyer of various problems such as extremely loud noise, air pollution, traffic etc., of homes in the general area of such raceway points to how detrimental this speedway can be for potential new buyers and for our own current residents. Due to the proximity of homes, of which there are over 2,500 residences affected in the immediate area, housing values will most likely decline.

At least 7,000 residents within a 1 ½ mile radius of this project will be negatively impacted by the creation of this Motorsport complex. It is obvious that this effort between the City of Lompoc and the LVPRPF has not studied the real concerns for the citizens of Lompoc in a densely populated area of our community. I will strongly consider initiating a class action lawsuit with my fellow citizens against the City of Lompoc for allowing such an unfair, unjust and undeserved decision if this EIR is ruled in favor of building this Motorsport complex.

This project has been shot down once by the city council. It is hard to believe that this issue has been reopened – nothing has changed!! This Motorsport complex is bad news to the citizens of Lompoc and does not belong in our city.

Sincerely,

Daniel J. Turocy

Daniel J. Turocy

1321 Sunnybrook Ct.

RECEIVED

JUL 22 2016

Planning Division

Rhys M. Evans
2058 Green Ridge Circle
Lompoc, CA 93436

RECEIVED

JUL 25 2016

Planning Division

24 July 2016

Lucille Breese
City of Lompoc
100 Civic Center Plaza
Lompoc, California 93436

Regarding: Environmental Impact Report for Proposed Lompoc Motorsports Park

Ms. Breese,

As a resident, homeowner and voter in the City of Lompoc, I am writing to express my absolute opposition to the proposed "Lompoc Motorsports Park" adjacent to the Santa Ynez River in north Lompoc. The Draft Environmental Impact Report is woefully inadequate, poorly constructed and it will most assuredly result in expensive and lengthy legal challenges. With hundreds of comments in opposition to the proposed project already received and in the public record, I find it incredulous that the city is continuing to plan for this project, at very significant public expense, at the specified location.

I will divide my further comments into three major subject areas: General comments, Biological Resources and Noise. Although I also believe the EIR for the project poorly discusses Toxics/Hazards, Utilities, Hydrology and other issues, it is simply impossible, as an individual, to review more than 1,500 pages of documents and submit coherent commentary; therefore I will at least at this time leave comments on those subject areas to others.

General comments:

Although it is commendable to provide documents to the public via the city's website, it is inappropriate for them to be available only in files in excess of 100 megabytes. The appendices, especially, should have been provided individually, not as a single document exceeding 1,100 pages in length. The appendices also did not include a usable table of contents. For example, the "Habitat and Natural Resources Assessment" starts on page 695 of 1,141, which is simply not reasonable. Furthermore, the appendices were provided in a version of software that is not readily searchable. I believe these actions are not within the intent of the California Environmental Quality Act, which requires open and reasonable availability of documents to the public.

Several of the public documents, press interviews and informational releases regarding the project provided earlier implied that the facilities, especially the "drag strip" component, would only be used for a small number of events annually. However, the EIR clearly details a potential for hundreds of events annually, not to mention testing and practice actions.

The sections discussing surrounding properties and land use were written with inappropriate bias. While there is agriculture, the airport and industrial use as well as the animal care facility, the document should also mention and quantify the number of homes, apartments, hotel rooms, restaurants and other properties which are simply not compatible with land use that will provide nearly constant, excessive noise hundreds of days per year. I would strongly suggest that a detailed evaluation of how many homes are within 1 mile, 1.5, 2 and 2.5 miles (at a minimum) of the site be commissioned. This information was provided by a member of the public (apparently by a Mr. Turocy, in the appendices at page 376); it is hard to believe that the city did not consider this information to be important enough to either confirm or refute within the Draft EIR.

There is far too much use of conditional language, to include "to the maximum extent feasible," and "unless the lights are used." Additionally, far too common use, especially in the Biological Resources report and within the minimization measures, of "should" vs. "shall," "will" or "must;" ("surveys should be conducted by a qualified biologist..."). "Should" is simply not a strong enough word

Much more analysis and evidence must be provided to demonstrate that no water or stormwater run-off from the site will impact the Santa Ynez River. There also must be a much more detailed assessment of what measures will be taken to ensure that spilled automotive fluids are completely controlled and contained on site. Although this assessment must focus on the vehicles used within the various facilities on site, you must also include an analysis of the parking areas. Obviously, the site is proximal to the Santa Ynez River; while a high-flow event is unlikely in any given year, this EIR seems to negate any possibility of a flood at any time within the life of the proposed project.

Additionally, attempts to point lights downward so as not to impact off-site resources is simply "not enough." Lights in the area of the Santa Ynez River are highly likely to detrimentally alter the behavioral patterns of all wildlife nearby.

I am simply astounded that the plans call for the use of portable toilets for crowds potentially including 2,000 persons.

The location of the "Arroyo Willow Thicket" mitigation site must be clearly identified AND assessed for the same impacts to resources that are assessed for the project area.

Biological Resources:

The Biological Resources portion of the EIR (Appendix 4) is entirely insufficient. The report specifically states that it was "reconnaissance-level," which is certainly inadequate for inclusion at the EIR level. It clearly states that only one biologist and one botanist spent only one day on site in January, 2016. It further states that this visit was not in the optimal survey period for most species. I would argue that it was not within the optimal survey period for ANY species, and that numerous, additional surveys must be included prior to the finalization of the EIR. I would further argue that additional surveys must include nighttime assessments of the site to determine habitat use by bats, owls and other nocturnal species.

The Biological survey includes no discussion of resources present in areas adjacent to the proposed development. Because it is certain that noise and light impacts will extend beyond the site, and likely that stormwater, wastewater, hazardous materials, litter and overflow parking impacts will extend beyond the site, a buffer of at least 500 feet on all sides should be surveyed.

As discussed above, the lack of surveys within a buffer zone of the project site result in a remarkably inadequate "species list" considered within the Draft EIR. My comment from earlier in this year (included at page 331 of 1,141 – note again my disappointment at the ridiculous way in which appendices were provided) listed several species that were not considered. Especially disconcerting is the lack of inclusion of surveys for Yellow-billed cuckoo, Western burrowing owl, Least Bell's vireo, California tiger salamander, Townsend's big-eared bat and the Monarch butterfly (candidate species).

"Project site does not include aquatic habitat" is NOT sufficient to remove from consideration several dozen potential species (of plants and animals), as it is clear, once again, that noise, light and likely hazardous materials from the proposed action site will have a significant potential to harm aquatic species in the nearby Santa Ynez River habitat.

Comments on individual plant and wildlife species follow:

- El Segundo blue butterfly surveys were inadequate. It no surprise that the species was not observed in January; however not finding seacliff buckwheat within the proposed project area or a reasonable buffer area is surprising. Additionally, the statement "...species requires coastal dune habitat" is absolutely incorrect; the "ESBB" has been found in numerous locations east of Vandenberg Air Force Base including but not limited to the Burton Mesa Ecological Reserve, which is very close to the proposed project site.
- Vernal pool fairy shrimp. One brief site visit in the midst of a five-year drought is not adequate to remove this species from further consideration.
- Vandenberg monkeyflower. The habitat for this species is very similar to the conditions found adjacent to the Santa Ynez River and its tributaries both upstream and downstream of the project site; just because the plant was not observed in January (not surprising in the least) is not enough to eliminate this species from further consideration. There is designated Critical Habitat for Vandenberg monkeyflower within a very short distance of the proposed project area.
- Western snowy plover. While I freely agree that this species will not be adversely affected by the proposed project, the use of an outdated scientific name of this species (in addition to numerous typographical errors elsewhere within "Appendix B" of "Appendix 4.3") further demonstrates the inadequacy of the biological resources assessment in its entirety.

Additional general comments regarding the Biological Resources Report (appendix) and the Biological Resources section of the Draft EIR:

- Several statements regarding the United States Endangered Species Act make no mention of the role played by the National Marine Fisheries Service;
- The document poorly defines the Migratory Bird Treaty Act, which protects almost all bird species, not just the few taxa/families listed;

- "Threshold 4.3.1" does not include National Marine Fisheries Service;
- It is very unclear what additional analysis and permitting is planned for this project in regards to effects to both state and Federally listed Threatened and Endangered Species. Several actions, such as plans to capture and relocate a California red-legged frog from the project area clearly would require several permits.

Noise:

As a homeowner of a property less than one mile from the proposed project site, noise is a major concern; however I also note this submittal has already reached four pages in length. There are literally hundreds of comments expressing concern about noise levels, their impacts on quality of life and property values already in the public record for this project; therefore, I will just share a few additional thoughts at this time.

In general, I am not overly concerned with construction noise, but I am very concerned about operational noise, especially if events (to include practice and training) are conducted several times per week, 50 or more weeks of the year as is detailed in section 3.0 (for example, up to 50 "Wednesday evenings" per year or 55 "weekend days" per year). And as discussed earlier in this document, my concern about "unless lights are used" means that literally thousands of individual "noise events" could occur after sunset annually.

It is unclear, based upon my admittedly cursory review of more than 1,500 pages of documents, exactly how the noise assessments were completed. Were all analyses solely completed via computer modeling? Claims that sound will not travel significant distances from the project site are hard to believe. There is repeated discussion of "sound walls," but no clear indication that such structures are planned, and if so, where they would be located. The city should plan well-publicized demonstrations of potential noise effects to (perhaps) ameliorate the concerns of property owners (like me) in the immediate project area.

I will conclude this letter by again stating that I am entirely opposed to this proposed project, on numerous grounds, and I predict that the city and its officials will be held legally accountable if it is approved.

Thank you,

(signed) Rhys M. Evans
24 July, 2016

Lucille Breese, AICP
City of Lompoc
100 Civic Center Plaza
Lompoc, CA 93436

Dear Ms Breese,

Reviewing the Draft EIR for the Motorsport Park, I find it incomplete and inaccurate on several points:

1) The Noise Study states that there are already pre-existing noise levels of 72.3Leq at several points along central avenue adjacent to the subdivisions (Glen Ellen, Meadows, Briar Creeks, etc...) of concern here. Therefore, the noise generated from the proposed motorsports park should not be of concern to the residents. According to the report, the measurement used is from the busiest and loudest intersection nearby (central and H street), and that value was measured for a period of 15 minutes between the time of 9:00am and 9:59am on only one day. This measurement is scientifically unsound: it was not done near any of the subdivisions mentioned above; it was only done once; and the events in question not be taking place in the morning according to what I understand. These values cannot be taken as realistic for the neighborhoods which are adjacent. As residents, we know that the noise level rises in the morning and abates during the day, rises again in the evening as people return from work, to decrease again afterwards. Noise levels of 72.3LEQ at off-peak hours would definitely impact the living conditions of the neighborhood during the late afternoon, evenings and week-ends and would be in violation of the city 2030 General Plan noise policy for residential areas.
2) It is my understanding that, motorsports vehicles can operate at noise levels up 95db. The report needs to clarify the details of the simulation used to represent the noise that the motorsport park will generate. what vehicle did they use?; where were the measurements taken?; and, was the vehicle the same as those that will actually participate in these events (i.e vehicles without exhaust pipes as mentioned in the report)? These questions are crucial to making a determination as to whether the proposed park will meet the noise level standards for the adjoining subdivisions.
3) The Noise Study in the EIR made no differentiation between ambient noise and 'noise annoyance' which refers the negative effects noise can have on a neighborhood. When a neighbor's car alarm goes off, even if the measurement is below 60db, we expect them to turn off the alarm. If a neighbor's dog barks continuously at 59db, we go to the neighbors and ask them to calm their pet down. These type of noises eventually become an annoyance. According to the report, drag racing "feature(s) two vehicles and would take place approximately 20 times per hour, with a race duration lasting approximately 5 to 12 seconds." For many of the residents with whom I have spoken, this would an example of 'noise annoyance'. What will be the noise annoyance to the residents of these subdivisions?

4) The report speaks to no significant economic growth for the city of Lompoc. However, nowhere in the report has the potential economic loss to people living in surrounding neighborhood also been estimated. Studies I have looked at show a decrease in housing values for people living close to parks such as these. Noise is a deterrent to people considering living around such parks.
5) Although the construction of infiltration ponds is advantageous for the construction of the park, nowhere does the report address the possible pollution of these ponds from the hundreds of vehicles that will be on site. These ponds could eventually become sources of pollution for the water table and I feel the issue should be studied.
6) The report states that 1250 participants or more could potentially attend these events. This will have an significant effect on local traffic and hotels. However, the report is not clear in what ways this will impact the city. The report mentions people staying in self-contained RVs on site but I find this unrealistic and would like some clarification on what the impact on traffic and hotels has been in other cities. Additionally, the noise generated by the resulting traffic could make it difficult for adjoining subdivisions to remain within the 60 dB limit as described in 2030 General Plan noise element, policy 1.1.

Sincerely,

Sandrine Zanella
1204 W Barton Ave
Lompoc, CA 93436

RECEIVED

JUL 25 2016

Planning Division

Weigel, Cherridah

From: Breese, Lucille
Sent: Monday, July 25, 2016 5:56 PM
To: Weigel, Cherridah
Subject: FW: Proposed Lompoc Motorsports Project

From: Andersen, Michael [mailto:MAndersen@Communitywestbank.com]
Sent: Monday, July 25, 2016 5:13 PM
To: Breese, Lucille
Cc: michael.andersen@rocketmail.com
Subject: Proposed Lompoc Motorsports Project

Good afternoon Lucille,

I am writing in regards to the proposed Lompoc Motorsports Project. My home address is (I am the homeowner for last 13 years):

2317 Carrizo St
Lompoc CA 93436
805-291-2426

I object strongly to the location of the proposed motorsports park. I've never heard of something like this being put in the middle of a town, this should be out in the countryside where the noise, exhaust, and extra traffic will not impact people's homes. Part of the charm of a small town like Lompoc is being quieter than living in a city, but that will change if this park goes into Lompoc. If the project goes forward you can expect plenty of complaints, lawsuits against the city, and people leaving town. My home backs up to H Street and I will be very negatively impacted by its location. I am definitely against the park, certainly in its proposed location.

Note: This e-mail contains PRIVILEGED and CONFIDENTIAL information intended only for the use of the specific individual or entity named above. If you or your employer is not the intended recipient of this e-mail or employee or agent responsible for delivering it to the intended recipient, you are hereby notified that any unauthorized dissemination or copying of this e-mail or the information contained in it is strictly prohibited. If you have received this transmission in error, please immediately notify the person named above at once by telephone and delete the message. Thank you.

RECEIVED

JUL 26 2016

Planning Division

RECEIVED
JUL 2 6 2016
Planning Division

RECEIVED
JUL 2 6 2016
Planning Division

TO: CITY OF LOMPOC

FROM: ART AND SHERRY HIBBITS

DATE: 07/17/2016

SUBJECT: ENVIROMENTAL AND FISCAL IMPACTS OF THE APPROVAL, PERMITING, CONSTRUCTION, AND OPERATION OF THE LOMPOC MOTORSPORTS FACILITY, PROPOSED TO BE LOCATED NORTH AND CONTIGUOUS TO THE LOMPOC AIRPORT.

BACKGROUND: WITH THE DEIR NOW AVAILABLE FOR PUBLIC COMMENT, IT HAS BECOME ABUNDANTLY CLEAR THAT THE MANY FISCAL IMPACTS OF THE PROPOSAL ITSELF AND THE REQUIRED MITIGATION COSTS ARE NOT KNOWN, AND POTENTIALLY COULD BE SIGNIFICANT.

IT WAS STATED AT THE ONSET THAT ALL COSTS RELATED TO THIS PROPOSAL WOULD BE PAID BY THE MOTORSPORTS GROUP AND A STATE GRANT WITH NO COST TO THE CITY OF LOMPOC.

DISCUSSION: The following are some of the obvious costs likely to occur if this proposal goes forward:

(1) The costs of construction of a new well and its pump, electrical, and other hardware,
(2) RV Park: A required mitigation, which will require its own EIR and other costs such as permitting, utilities, construction, restrooms, etc.
(3) If portable restrooms are allowed, then there will be ongoing rental and servicing costs. If permanent, then permitting, construction, and hook-up to City sewer plant, will be additional costs,
(4) Fire hydrants and compliance with City Fire Codes will add costs,
(5) The costs of Traffic Mitigation Fees and construction of access from Central Av. via V Street to proposed site,
(6) The costs of ongoing Federal Environmental review including FAA and US Fish and Wildlife,

(7) A share of the costs of providing Parking for the non-State Grant Drag Strip,
(8) Costs related to lights, utilities, permitting and construction of a Pit Area,
(9) Costs of providing Police, Fire, and Emergency Medical during events,
(10) Various types of Insurance that are required for this type of operation, including but not limited to Liability, Personal Injury and Property Damage,
(11) Costs related to making this project ADA compliant,
(12) Construction of a Height Restricting Structure for West Vehicle Access, or as an alternative, a substantial lowering of the level of V Street, with resulting water retention and flooding issues,
(13) Cost to purchase and maintain 72 acres+ of Willow habitat.
(14) All costs related to construction and maintain water retentions basins, (note that the specification of one inch deep, must be an error)

The preceding is not in order of significance, and there are other DEIR requirements having additional costs. It should be noted that this project is to be built to "CITY CODE."

It should also be noted that a similar project was proposed in Santa Maria in 2010 and is under review. How this will affect the economic viability of the Lompoc Proposed Project, must be investigated.

To summarize: It should be emphasized that so far there has been no thorough economic analysis for this proposal: no Business Plan, no cash flow, no budget, no projection of required Capital Expenditures and ongoing operating costs...and most importantly, no apparent assignment of fiscal responsibility.

Further note that the Airport must be a profitable enterprise and NOT a Charitable operation.

Although the DEIR is not supposed to investigate fiscal issues, the information and mitigations contain therein result in major, major project costs and additional Environmental Impacts.

Speaking of Environmental Impacts, the Impacts of Noise probably cannot be mitigated using conventional sound walls, since many of the neighborhoods

affected are many hundreds of feet above the Noise source...and said Noise has been grossly underestimated in the DEIR.

This project should be denied (NO PROJECT ALTERNATIVE) on the basis of no feasible mitigation of the NOISE generated by the proposed activities. If approved, continuous monitoring of the NOISE LEVELS should be mandatory and unacceptable levels would result in corrective action by the operators and/or termination of the uses.

Please include this letter in the Comments to the DEIR

Respectfully submitted,

ART and SHERRY HIBBITS

1251 E. Hwy. 246

Lompoc, Ca. 93436

Lucille Breese, AICP
City of Lompoc
100Civic Center Plaza
Lompoc, CA 93436

Dear Ms. Breese,

In reviewing the Draft EIR for the motorsports park, I have found many areas of concern.

1) The noise study says there is no issue issue to mitigate. The data shows that the project fails to satisfy the 2030 General Plan Noise Policy:
    a) Page N-9 of the 2030 General plan noise element policy 1.1 states " the city shall require each land use to maintain noise levels at their property line in compliance with City Standards". We are talking about 60 Decibels in the subdivisions closest to the project As the data collected is not described in detail, it is hard to determine the EIR is accurate either on the high end or low end.
    b) Policy 2.4 states " The city shall continue to enforce its Noise Ordinance to minimize noise conflicts between adjacent land uses. The noise Ordinance establishes noise limits that cannot be exceeded at the property line." Again the value of 60 dB is of great concern since the details in the report do provide point of reference for discussion.
    c) Policy 2.3 states" the City shall minimize noise exposure in the vicinity of the Lompoc Airport by maintaining consistency with the adopted Lompoc Airport Master Plan." The motorsport Park being located right next to the airport is in obvious contraction with this policy.

2) Per the DEIR, the air quality during weekend motorsport events will be negatively affected resulting in lower air quality than is acceptable for all neighborhoods around "Central Avenue."

3) Per DEIR, traffic will increase on Central Avenue. This combined with increased pollution and increased noise will inevitably result in a loss of property value for all adjacent subdivisions. In fact, nowhere in the report is there mention of potential losses of property values in the adjacent subdivisions. In order to make a well informed decision, I believe the issue should be addressed formally.

Sincerely,

Lauren Renard

RECEIVED

JUL 26 2016

Planning Division

Lucille Breese, AICP
City Of Lompoc
100 Civic Center Plaza
Lompoc, CA 93436

Dear Ms. Breese:

In reviewing the Draft EIR for the Motorsports Park, I find several areas to be inaccurate and incomplete. I believe this document should not be adopted by the city without major revision. Several areas fail to address my concerns. The following subjects have not been addressed or are not able to be mitigated resulting in an incomplete assessment of the proposed project.

1) The Noise Study says there is no noise issue to mitigate. This is inaccurate as their own data shows the project fails to satisfy the 2030 General Plan Noise Policy because it fails the following:
    a. Page N-9 of the 2030 General Plan noise element, policy 1.1 states "The City shall require each land use to maintain noise levels at their property line in compliance with City standards."
    b. Policy 2.3 states "The City shall minimize noise exposure in the vicinity of the Lompoc Airport by maintaining consistency with the adopted Lompoc Airport Master Plan."
    c. Policy 2.4 states "The City shall continue to enforce its Noise Ordinance to minimize noise conflicts between adjacent land uses. The Noise Ordinance establishes noise limits that cannot be exceeded at the property line."
2) The city will need to address issues raised by the Santa Barbara County Association of Governments (SBCAG) and the Federal Aviation Administration (FAA), as group recreation areas are "incompatible uses" for areas next to active runways after adopting the Draft ALUP.
3) And finally, per the DEIR, "the daily operational emissions generated by the proposed Project on a weekend motorsports event day cannot be feasibly mitigated to a less than significant level and the contribution of these emissions to the air quality within SCCAB is considered to be cumulatively considerable for this reason" (pg 4.2-31 of the DEIR.) This means operating the park will make air quality demonstrably worse and reduce the quality of life for all of the community.

Sincerely,

Mark Gober

RECEIVED

JUL 27 2016

Planning Division

July 26, 2016

Lucille Breese, AICP
City of Lompoc
100 Civic Center Plaza
Lompoc CA 93436

Dear Ms. Breese:

I am writing to express my opposition to the proposed Motorsports Park.

In addition to the depreciation of property values, the added air pollution, control and safety issues at our airport and traffic congestion (for starters) which are certain to be a result of such a project, I understand there was inadequate testing done for the EIR which was presented to the City.

The City has a responsibility to collect accurate information. I urge the City to re-test, or better yet, yield to the majority of citizens who are opposed to the project and Just Say No.

Sincerely,

Christine Jeszeck
1029 N Z St
Lompoc CA 93436

RECEIVED

JUL 27 2016

Planning Division

MS Breese, AICP

Ms. Breese:

The Draft EIR for the Motorsports Park is inaccurate and incomplete. This document should not be adopted by Lompoc without being corrected. The following is not all inclusive and has not been addressed and cannot be mitigated without a complete assessment.

1. The noise Study says there is no noise issue to mitigate. This is completely inaccurate as their own data shows the project fails to satisfy the 2030 General Plan Noise Policy because it fails the following:
    a. Page N-9 of the 2030 General Plan noise element, policy 1.1 states "The City shall require each land use to maintain noise levels at their property line in compliance with City Standards."
    b. Policy 2.3 states "The City shall minimize noise exposure in the vicinity of the Lompoc Airport by maintaining consistency with the adopted Lompoc Airport Master Plan."
    c. Policy 2.4 states "The City shall continue to enforce its Noise Ordinance to minimize noise conflicts between adjacent land uses. The Noise Ordinance establishes noise limits that cannot be exceeded at the property line."
2. The City will need to address issues raised by the Santa Barbara County Association of Governments (SBCAG) and the Federal Aviation Administration (FAA), as group recreation areas are "incompatible uses" for areas next to active runways after adopting the Draft ALUP.
3. Per the DEIR, "the daily operational emissions generated by the proposed Project on a weekend motorsports event day cannot be feasibly mitigated to a less than significant level and the contribution of these emissions to the air quality within SCCAB is considered to be cumulatively considerable for this reason" (pg. 4.2-31 of the DEIR). This means the Motorsports Park will make the air quality worse.

Sincerely

Lawrence V. Serpa Jr.

RECEIVED

JUL 27 2016

Planning Division

Weigel, Cherridah

From: Breese, Lucille
Sent: Friday, July 29, 2016 9:14 AM
To: Weigel, Cherridah
Subject: Fwd: Motorsports Park EIR

Sent from my iPhone

Begin forwarded message:

From: <WFasold@aol.com>
Date: July 28, 2016 at 7:41:39 PM PDT
To: <L_Breese@ci.lompoc.ca.us>
Subject: Motorsports Park EIR

I have read the EIR and has found serious deficiencies in the noise section of the EIR. Namely the study is seriously flawed in the following ways:
1. Background noise levels appear to have been deliberately taken near a very busy and noisy traffic intersection gives a false baseline of typical ambient noise levels. There is a lack of data collected, the location is wrong and the times of day relative to proposed track operations do not correlate
2. Noise attenuation data is not correct
3. Noise levels around peoples homes should not be estimated or read assuming people keep their doors and windows shut in a region where most household have no air conditioning and use cool ambient air to lower the temperature inside their home. Furthermore people who want to be outside in their yards should not be subjected to this noise.
4. I also challenge the use of taxpayer money to support this endeaver. Grant funds are a gift they are taxpayer money. The City of Lompoc is listening to a minority of people and obvious interests outside the region over the voice of he majority of people who would be affected in the areas nearest the proposed location. This affects residents living in Lompoc and nearby county residents also.

In summary the noise study is invalid for lots of reasons and should not be accepted as credible. Reject the study. This deficiency invalidates the EIR. Reject it or force them to do it over with a validated study.

Walter Fasold - a Mesa Oaks resident

RECEIVED

JUL 29 2016

Planning Division

August 3, 2016
Anne Jimenez
2802 Lewis Drive
Lompoc, CA 93436
805-733-1114

City of Lompoc
100 Civic Center Plaza
Lompoc, CA 93436
Attn: Lucille T. Breese, AICP

Ms. Breese,
The Lompoc Airport is a valuable asset to our community. Lompoc's quality of life is one to be envied. In both these regards, however, I find the EIR for the Motorsports Park to be inaccurate, inadequate and skewed in favor of the park, especially regarding noise, air pollution, traffic and environmental threats. Above all, the Motorsports Park is not compatible with airport use on airport property or with the Airport Master Plan.

Regarding the airport, the EIR states the Motorsports project will improve the Skydive Santa Barbara landing sites. In fact it will not. It will greatly increase the risks to sky divers. The current landing site must be changed to a less desirable one. There will be increased dust and dirt in the air hampering the sky divers and damaging the planes and buildings. Instead of helping the businesses at the airport as the EIR states, the park will likely force them to leave Lompoc, a big loss to the city on many levels.

Environmental impacts to the area in and around the airport will be exacerbated not minimized. Plants will be harmed by the increased dust and dirt. Animals will move out of their habitat to escape the noise, lights and dust.

The planes and buildings at the airport will be infiltrated with dust and dirt from the racetracks, a very negative impact on the airport and its operations.

Traffic as a result of the park is not insignificant. Road access to the airport will be restricted and congested with the increased traffic hampering use of the airport and access by emergency vehicles.
The entrance at George Miller Road will be extremely difficult for large vehicles and trailers to negotiate. Will traffic lights have to be installed? There will be a definite negative impact on traffic flow in and out of the city.

The use of V Street will be a nightmare for residents of that neighborhood and will cause more congestion, noise and pollution in that area.

The park will in no way helps to preserve the airport as implied in the EIR. The airport stands to lose 7 acres of land that it has already planned to use for a future extension of the runway. The park will restrict and infringe on airport use now and growth in the future.

The EIR states it will improve runway safety zones. False. The safety zones are designed to protect both planes and people on the ground. The planned park sits mainly in one of the safety zones. If there is an accident, a plane may likely veer off into the proposed grand stand and crowds at the park. It is clearly stated that stadiums and recreational uses are prohibited in airport safety zones.

The expansion of V Street to allow entry into the proposed park is also putting many people at greater risk, as they will be under the flight path of plans taking off from the airport.

Planes coming in for a landing at night may be adversely effected or even blinded by all the lights from the park during races. Has that been considered?

Finally, the airport is in jeopardy of losing the "over-run" area at the end of the landing strip. There have been accidents in the past when that area has been critical and some planes have crashed or had emergency landings in the agricultural fields at the end of the airport. This area is an integral part of the airport and required for safety reasons.

These issues cannot be dismissed and need to be addressed specifically by the EIR.

Regarding noise and the environment, the methodology used for the noise study in the EIR was intentionally designed to skew the results in favor of the Motorsports Park. Serious issues were minimalized to serve the best interests of Meridian.

The noise sampling that was done was incomplete and inadequate and did not at all reflect the true nature of the noise and its impact.

They only sampled one day from 9am to noon, on a Monday; chose poor, non-representative locations for their monitors; and did not use realistic noise levels of many cars racing. They should have sampled over several days at different times in order to take into account variable winds and weather. They need to sample in unobstructed paths from the park to the actual houses that will be impacted by the noise, especially those on or near the bluffs up by the Y. As proof of the importance of this, we live several house in from the bluff in Mesa Oaks and on many days can hear the band practicing at Lompoc High School, a considerable distance away. The wind and weather have an impact on how noise travels and it is different from day to day. This was not accurately tested by Meridian.

Additionally, Meridian placed at least 2 of their noise monitors in areas protected to some degree from the very noise they were supposed to be sampling. One was placed behind the

hill with the flagpoles and a second was placed in a depression farther away, again protected from the noise. This appears to be blatant manipulation of the testing to favor the park. I challenge them to put sound monitors up where the actual houses are that will get the brunt of the noise.

Also, what are the actual noise levels at the property line of the airport and of the proposed Motorsports Park? Are they within the legal limits once past the property boundaries?

Environmentally the proposed park is in a flood zone. If and when there is a flood, the Santa Ynez River will be contaminated with oil and toxic waste from the park. Will the infiltration ponds mentioned leach into our ground water? Not acceptable and irresponsible.

All of these issues need to be further investigated and addressed. The proposed park is in violation of many airport regulations and is infringing on the lives of many local residents.

Thank you,
Anne Jimenez

Weigel, Cherridah

From: Breese, Lucille
Sent: Tuesday, August 02, 2016 6:11 PM
To: Weigel, Cherridah
Subject: FW: Motorsports Park Draft EIR

-----Original Message-----
From: J Norris [mailto:john.g.norris.jr@gmail.com]
Sent: Tuesday, August 02, 2016 3:27 PM
To: Breese, Lucille
Subject: Motorsports Park Draft EIR

Good afternoon,

I have been jumping at Skydive Santa Barbara for the last year and a half. I am totally opposed to the creation of this park directly in the landing area. Considering Lompoc is a relatively small town surrounded by other unoccupied terrain, why is the construction of this motor sports park not being considered elsewhere?

The skydiving community is very tight-knit. We view this drop zone as our second home. Someplace where we can live "in the moment" & share unforgettable times with people we consider our family. The construction would not only unquestionably impact the revenue generated for the town by SSB, but it would break this family apart due to the stresses of having to travel even farther.

In fact, I met my soon-to-be wife after going to this drop zone for the first time on a whim. I drove all the way from San Diego on a long weekend. Here we are close to two years later & we scramble to the drop zone if schedules permit. It is our favorite pastime & having such a landmark in Lompoc forced to move elsewhere because some park that could easily exist elsewhere is trying to occupy the landing area would be detrimental to the town, memories (not just mine) & the relationships forged therein.

Please consider building the park elsewhere & do not impede the operations of Skydive Santa Barbara.

Respectfully,

J. Norris
Semper Fi

RECEIVED

AUG - 3 2016

Planning Division

Sent from my iPhone

Weigel, Cherridah

From: Breese, Lucille
Sent: Wednesday, August 03, 2016 5:56 PM
To: Weigel, Cherridah
Subject: FW: Motor Sport Thing

Follow Up Flag: Follow up
Flag Status: Flagged

From: judi alderman [mailto:judialderman@hotmail.com]
Sent: Wednesday, August 03, 2016 2:28 PM
To: Breese, Lucille
Subject: Motor Sport Thing

To whom it may concern, Motorsport Thing

It concerns me, I have lived in Lompoc all my life, and I hate to see Lompoc doing it again as I ask the question, why would the council cause an establish business that causes no problem at all, (like the Skydive SB) has no real environmental impact to leave so that a nothing but environmental impact business could dig up ground and cost us a bunch of money. My suggestion is why don't they put this in a place that is unfit, like the property on the east end of Laurel where Grefco use to be. This may even help the ground, is no good and it is a large piece of property next to the river, and it wouldn't cause someone else to go out of business.

Now while we are on the subject of Lompoc and it's poor choices, why in the world are we allowing a Russian to come into town with a wild plan of a space center. What is wrong with Lompoc that they can't plan there own Space Center. This person has already failed once, but she is not stupid she sees an easy mark in Lompoc. What exactly does she have that we or someone in Lompoc doesn't, I have been to the Space Center in Huntsville, it is wonderful, much of the space stuff they have only they have and Lompoc is late as usual. So just don't do that with this stranger from Russia, foolish.

One last word, WHAT ABOUT THE TREES YOU HAVE CUT DOWN, REPLACE THEM. Sorry that was more than one word.

Sincerely, I Love Lompoc.

Judith Alderman
judialderman@hotmail.com
805-717-1808

RECEIVED
AUG - 4 2016
Planning Division

Weigel, Cherridah

From: Breese, Lucille
Sent: Thursday, August 04, 2016 9:55 AM
To: Weigel, Cherridah
Subject: FW: Against Motorsports Park

RECEIVED

AUG - 4 2016

Planning Division

From: Steve Castro [mailto:lgm30f@verizon.net]
Sent: Thursday, August 04, 2016 9:51 AM
To: Breese, Lucille; Lingl, Bob; Starbuck, Dirk; Vega, Victor; Mosby, Jim; d_homdahl@ci.lompoc.ca.us
Subject: Against Motorsports Park

Honorable Bob Lingl, Dirk Starbuck, Victor Vega, Jim Mosby, and DeWayne Homdahl,

I strongly oppose the proposed Motorsports Park to be located in Lompoc. I feel the environmental impact study pertaining to noise abatement is slightly fabricated. The EIR addresses issues for muffled exhaust systems, however, vehicles will be permitted to operate with open exhaust systems. Additionally, open headers is a completely different issue.

Page 3.0 – 29 states:

"OHV Riding and Racing Events
OHV racing events would begin at 9:00 AM and would conclude one hour before sunset unless the lights are used, in which case events would end at or before 10:00 PM. A variety of OHV events and activities would be accommodated by the proposed Project. Note that any motor vehicle operated off highway is considered an OHV. Additionally, a highway-licensed vehicle is an OHV when operated off of the highway. However, some of the more common OHVs include ATVs, dirt bikes, sand rails, and recreational utility vehicles. All vehicles in the OHV area must have California-legal exhaust device. Vehicles permitted for mud bog/sand drag events only will be permitted open exhaust."

Page 3.0 – 30 states:

"Drag Strip Events
Drag racing events would begin after 9:00 AM and would end by sunset until the lights are installed, and would end at by 10:00 PM after the lights are installed. Local drivers for local drag strip events would drive their street legal vehicles to the strip, and semi-professional and professional teams would bring one or more vehicles and trailers. The number of spectators and participants for drag strip events would vary depending on the time, day, and type of drag event, as shown **Table 3.0-2**. Weekend and Saturday drag racing would be required to have 60 percent muffled exhaust devices. The Division Finals Weekend,
Specialty Drag Racing Weekend, and Specialty Drag Race Events would be permitted to have open exhaust and open header classes. The private track rental would be permitted open exhaust. Overnight RV camping would be allowed during the events."

Open exhaust and open headers will undoubtedly exceed 88dB as stated in the EIR as the maximum noise level.
I also feel that the proposed Motorsports Park will ultimately force Skydive Santa Barbara to relocate to a different city. This business has proved to be welcomed by the City of Lompoc and has provided income and pleasure for the residents of the Lompoc community.

Please deny this project, the draft EIR contains many inadequacies that obligate the council to deny this proposal on behalf of the citizens of the Lompoc community.

Respectfully submitted,

Steven M. Castro

RECEIVED

AUG - 4 2016

Planning Division

Weigel, Cherridah

RECEIVED

AUG - 4 2016

Planning Division

From: Breese, Lucille
Sent: Thursday, August 04, 2016 8:38 AM
To: Weigel, Cherridah
Subject: FW: Ken@sbcan.org

From: Patty Darr [mailto:pdarr709@gmail.com]
Sent: Wednesday, August 03, 2016 9:56 PM
To: Breese, Lucille; Starbuck, Dirk; Lingl, Bob; Vega, Victor; Holmdahl, DeWayne; Mosby, Jim
Subject: Ken@sbcan.org

Re: Proposed Motor Sports Park

I would like to thank Ken Hough (SBCAN) for his excellent commentary relating to the proposed Motor Sports Park in the August 3rd issue of the Lompoc Record. I agree with him 100%. He clearly addressed every important aspect of the EIR and the obvious reasons this project should be denied by the City of Lompoc.

I have lived in Lompoc since 1960 and as a long time resident I am very much alarmed by the potential negative impacts of this project. I live on the northeast side of town near the multi-purpose trail. The noise created by vehicles (dirt bikes, trucks, ATV's) being driven illegally on the trail and in the riverbed between Riverside Drive and River Park can be heard at my house on 8th Street. When walking the trail we have been dusted by dirt bikes and nearly run over by ATV's and large trucks coming back onto the trail from the riverbed. Signs clearly posted on the trail prohibiting these vehicles are blatantly disregarded. I have never seen the LPD or SB County law enforcement go after the offenders. The absolute last thing this town needs is more noise and pollution coupled with the discourteous behaviors and destruction of the environment by a drag racers whether in a legal park setting or in the riverbed. The supporter who made the comment this proposed park would "save lives" is delusional. Building a motor park will encourage more street racing and attract a contingent who appear to have little or no regard for the environment or respect for other citizens who prefer to walk the trails. There are many other parks and areas in Lompoc that need improvement where local taxpayer monies would be better spent before we throw $$ away on this ill conceived motor sports project.

Finally, may I suggest cleaning up the eye sore as you enter Lompoc on Hwy 246 just past Hibbits Ranch. All types of junk and run down cars mixed with fallen eucalyptus trees hanging over a broken chain link fence is not a good first impression. A safer crossing for the homeless contingent who must cross the bridge (many times with small children in tow) every morning and night should also be a high priority. If Lompoc wants to present as a tourist destination we need to clean up this entry to the city. The gateway to the Lompoc wine ghetto looks like a ghetto.

Thank you for your consideration.

Patty Darr

RECEIVED

AUG - 4 2016

Planning Division

Weigel, Cherridah

From: Breese, Lucille
Sent: Wednesday, August 03, 2016 5:44 PM
To: Weigel, Cherridah
Subject: FW: Motorsports Project EIR

Follow Up Flag: Follow up
Flag Status: Flagged

From: Molly Gerald [mailto:mollyfgerald@gmail.com]
Sent: Wednesday, August 03, 2016 3:08 PM
To: Breese, Lucille
Cc: Lingl, Bob; Starbuck, Dirk; Vega, Victor; Mosby, Jim; Holmdahl, DeWayne; Wiemiller, Patrick
Subject: Motorsports Project EIR

Dear Ms. Breese - after attending the August 1st meeting of the Airport Commission, I would like to ask that the City heed the assessment of the Commissioners who spoke with damning statements regarding the location of the Motorsports Project at the Lompoc Airport. Based on these statements, going forward would in no way be in the best interest of the City and its residents. It is hard to fathom how this project could move forward given the incompatibility clearly explained by the commissioners after their review of the EIR.

Molly Gerald, Lompoc resident

RECEIVED

AUG - 4 2016

Planning Division

Lucille Breese, AICP
City of Lompoc
100 Civic Center Plaza
Lompoc, CA 93436

Dear Ms Breese:

In reviewing the Draft EIR for the Motorsports Park, I found several areas to be inaccurate and incomplete. I believe this document should not be adopted by the city without major revisions. Several areas fail to address my concerns. The following subjects should be reviewed and added to the next report.

1- **Noise**: The noise test done in those several locations for regular traffic in Lompoc does not do anything. What needs to be done is noise testing with 2 high performance cars drag racing and at the same time with 10 or 15 motorcycles running, that will better reflect the noise level. To have the park open all day, all week will be a great noise annoyance. Now when you do the test with high performance cars, please note what kind of cars, exhaust, motor etc.
2- **Water**: We are in a drought season and the amount of water you show using from the Lompoc reserve is really very high and not acceptable, plus, the water used to clean the track will be going in our Lompoc Drinking Water. Are there any efforts to do more filtering?
3- **Airport**: I thought there were distances required between airport and recreational parks...What is the approved distance? Then have you considered the insurance required in case of accidents god forbid but a plane crashing in the stands?
4- **Emergency vehicles**: It is required to have at all times an ambulance and fire truck there. Does Lompoc have an extra fire truck and ambulance? They will have to be there all days during regular hours.
5- **RV Park**: The Motorsport Park is not an RV park so allowing RVs to stay there overnight is not permitted, not mentioning where people will do their dumping.
6- **Birds/wildlife/ fauna/flora**: The report states it is negligible the effect of the park on Wildlife etc. Well the noise and the dirt etc ...will push them away.
7- **Hazardous material**: Has there been an investigation as to see if those pipes on the site are covering toxics materials tanks?
8- **Recusal of City Council board member**: I was told one of the members has shares in the projects. That person should recuse themselves as I don't feel they can be impartial.
9- **Street access**: I believe there are rules regarding having access to the park and needing 2 turning lanes. This would mean at the entrance access to the park, some property will need to be bought in order to widen Central. Was that taken in consideration?

I moved to Lompoc to be in a nice quiet place to retire. This Motorsports Park will be very noisy and 7 days a week, wow! My husband use to race the ¼ miles with a street legal car. Let me tell you just starting the car would have our house shake, so I know what noise this park will cause. Plan the park somewhere else, please.

RECEIVED

I hope to see answers to my questions in the next report.

AUG - 4 2016

A very concerned Lompoc resident

Planning Division

Weigel, Cherridah

From: Breese, Lucille
Sent: Monday, August 08, 2016 12:08 PM
To: Weigel, Cherridah
Subject: FW: The proposed motor cross near the airport

I have printed this out

-----Original Message-----
From: Maria Lydia Baltierra [mailto:mlbaltierra@hotmail.com]
Sent: Sunday, August 07, 2016 4:39 PM
To: Breese, Lucille
Subject: The proposed motor cross near the airport

Dear City Council

I am very much against the city investment in a motor cross track.
I believe the race track will appeal to a very small minority of city residents while the clear majority of us will be burdened with the eventual financial cost. In addition to the potentially financial cost it is that it is clear to me that most of my fellow residents are opposed to Lompoc pursuing this environmentally destructive form of recreation. It is good that we want to invest in our future, but we should make investments in programs that serve the greatest number of our citizens, not a privilege of the few that can afford the time and expense of race car ownership.

María L Baltierra
805 736 0455

Sent from my iPad

RECEIVED

AUG - 8 2016

Planning Division

Breese, Lucille

From: Jason Nasato [jrnasato@yahoo.com]
Sent: Saturday, August 06, 2016 8:36 AM
To: Breese, Lucille
Subject: Motor Sports Park

This project must be denied!

V.V. to Olive Street is 4 miles and 7th Street to Floradale Ave is 3 miles. The proposed location is in between the residences of V.V., Lompoc and the "Y" area. This is where the majority of people live.

Don't take a chance to approve something that has the biggest risk of noise, dust and engine emissions in the center of our homes. Keep this out and away from the little 4 mile square we live in.

Basic facts:

- Airport runway to Olive Street - 2.25 miles
- 7th Street to Floradale Ave - 3 miles
- Airport runway to the "Y" - 5000 feet
- Airport runway to Celestial Way V.V. - 1.7 miles

This project is inconsiderate of the resident population just outside the city limits by us having no voice at Lompoc City Council Meetings. (voice = a vote)

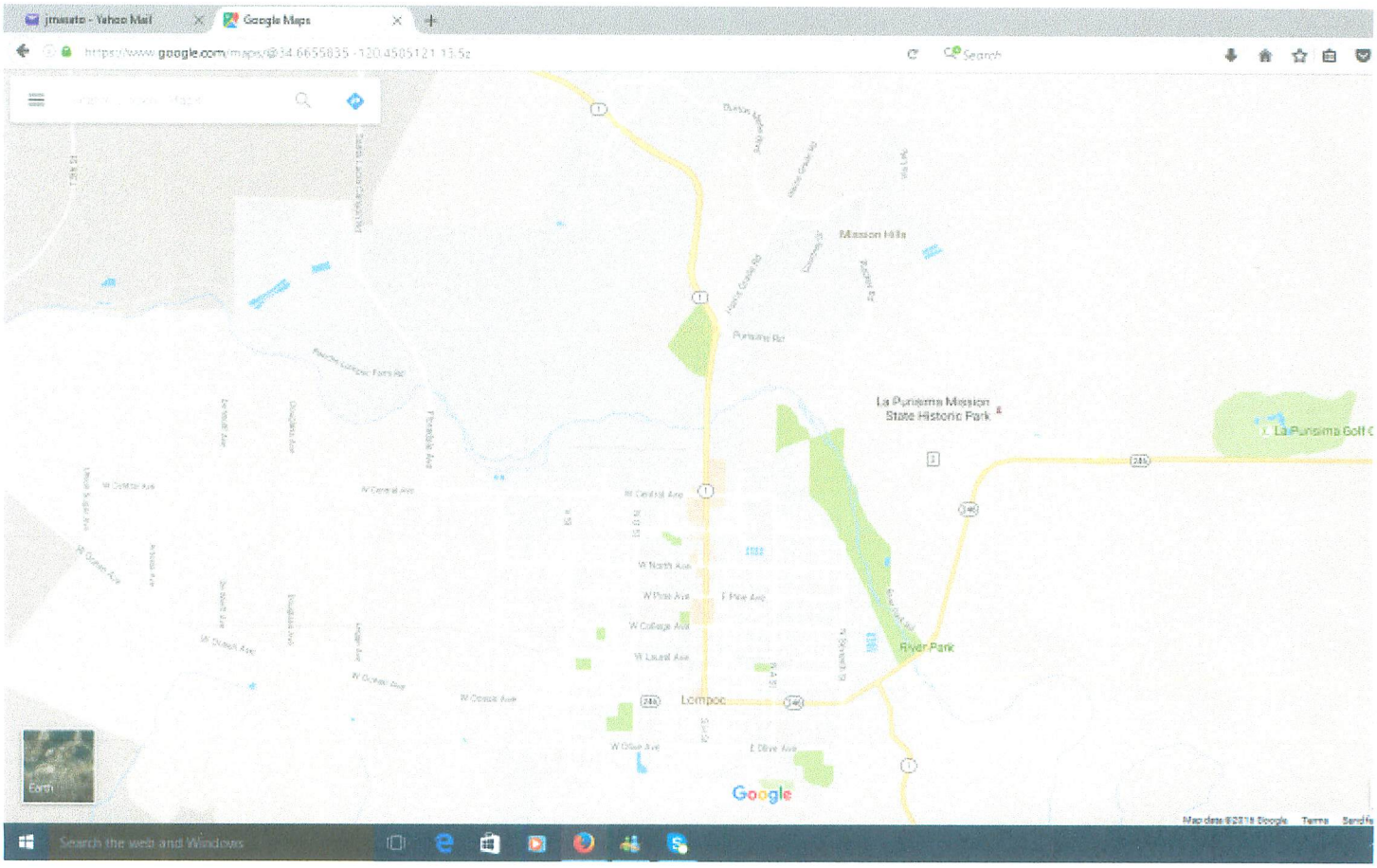

Jason Nasato

Weigel, Cherridah

From: Breese, Lucille
Sent: Monday, August 08, 2016 12:13 PM
To: Weigel, Cherridah
Subject: FW: Letter to City Council Concerning Motor Sports Park

printed

-----Original Message-----
From: Barry Weaver [mailto:barryweaver@me.com]
Sent: Sunday, August 07, 2016 1:04 PM
To: Breese, Lucille
Subject: Letter to City Council Concerning Motor Sports Park

Dear Council Members,

This year the U.S. National Oceanic and Atmospheric Administration, well known as NOAA, published a report that 2015 was the hottest year in recorded history. This global temperature increase showed United States producing 20 percent of all heat warming emissions (see Scientific American Aug 2016). With nearly a hundred countries participating, and hundreds of scientist working on this report, it is too serious to be disregarded. In fact, auto born pollution actually increased in 2015.

Cars, powered from fossil fuels, are the single greatest contributor to global warming. This is well understood by most citizens today.
This needs to be crystalized into our thoughts. We are cooking the planet.

Here in Lompoc we are discussing a proposal to invest further in a project that is, and should be, an obsolete form of recreation.
A recreation for only a few. A project that will have negative effects on ourselves, our environment and on our self image as a community.
Can we truly carry the cognitive dissonance that here in Lompoc we encourage our people to participate, and actually in debt ourselves, to activities that are contrary to our best interest. As a city our priorities should be to calm traffic, promote healthy physical activities, reduce our carbon imprint and make a modern smart city.

Barry and Laurie Weaver

RECEIVED

AUG - 8 2016

Planning Division

Weigel, Cherridah

From: Breese, Lucille
Sent: Wednesday, August 10, 2016 2:05 PM
To: Weigel, Cherridah
Subject: FW: comments on the DEIR for the proposed motorsports park

---

From: Janet Blevins [mailto:janro48@gmail.com]
Sent: Wednesday, August 10, 2016 10:21 AM
To: Breese, Lucille
Subject: comments on the DEIR for the proposed motorsports park

Ms. Breese,

I find it completely unacceptable that a project designed for the mere fun and recreation of a small minority of Lompoc residents would create Class I Unmitigateable Air Quality impacts known to have serious, deleterious, respiratory health impacts for nearby residents, especially children and seniors.
In addition, it will make it harder for Santa Barbara County to meet the California state air pollution standards for PM10 and ozone, standards which the county has never met.

Sincerely,

Janet Blevins
1237 Primrose Ct
Lompoc
805-717-4160

RECEIVED

AUG 10 2016

Planning Division

RECEIVED

AUG 1 0 2016

Planning Division

3 Aug 2016

To: Lucille Breese, AICP, Planning Manager

From: Donald C. Edward, Systems Engineer

Subject: Disagreement with Motorsports Park Environmental Impact Report (EIR)

1. What gives the Motorsports Park the right to hold Off-Highway-Vehicle (OHV) or Drag Racing events from 9 AM to 10 PM, seven days a week with no regard for the peace and quiet of Lompoc and valley residents. The track will be within 0.3 miles of residential and businesses that in many cases have moved to Lompoc to enjoy the clean air, and quiet valley.
2. I find a recent statement from the Lompoc Record quite fitting: "No one's property value has ever gone up as a result of presence of a Drag Race Strip". The noise, traffic, dust and hydrocarbon pollution, will impact the life of all residents. The Motorsports Park is being pushed on the citizens of Lompoc by a few politically connected men, with no regard for the toll that it will take on the residents and the valley.
3. In reviewing the EIR, I first noted that it contained none of the Drag Strip actual live vehicle detailed dba testing that the chairman of the Motorsports Park association had promised, would be in the EIR. Mr. Linn stated at the April 2016 meeting at his office, that detail live testing was done with different types of vehicles and would include the test equipment, exact location of test equipment with distances, angles of test equipment to vehicles, and all dba reading. He stated that he could not show me the data at his office, since it was being incorporated into the EIR.

   I learned from reading the EIR support material that there was never any intent to have any real live vehicle dba data, as stated to me in much detail by Mr. Linn. Instead only computer simulated data would be used for the EIR report.

   In reading the report I found the data in the Drag Strip computer simulated data to be out of line with the typical data to be found at internet sites with articles from ESPN.go.com, Motor Sports magazine, Center for Disease Control and Prevention (CDC), and even articles by Richard Petty, that also stated that he has lost 85% of his hearing due to the thunderous core shaking sound levels. ESPN stated that Drag Racing is the Loudest Sport, with cars that idled at 115dba and blasting at 129 dba. Due to the extreme noise levels the racing associations have not been interested in tracking racing noise, and it has been within the last six years that numerous tracks have been shut down with class legal actions to remove the associated noise, traffic and pollution. In a CDC article it stated that Pit areas exceed 130 dba and that even some dba meters will cut out and not register the extreme noise levels. Since the EIR does not provide any actual data on vehicle types, testing, and the results do not approach the levels expected for open header or open exhaust all the noise data reported is insignificant. The EIR does not represent PEAK Pit noise and uses averaging of noise to further obscure the true noise events, this without open header and open exhaust distort the results.

   The data in the EIR Drag Strip noise tables 9, 10, 11, and 12 paint a picture that the Drag Strip will not provide any appreciable increase from the ambient noise ranges even at the closest location. This is because the basis for the computer simulated dba levels at the site are shown to be from 88 to 92 dba, far short of the realistic levels.

This data does not even take into consideration the fact that one vehicle can have noise level in excess of 120 dba with open headers. If you now start considering two vehicles at 120 dba this sums to a 3 dba increase to 123 dba. If you now consider six vehicles at 120 dba, this now sums to an additional 7 dba for a total of 127 dba.

Assuming that we use the 127 dba for multiple vehicles revving up with open headers at equal noise levels using the Inverse Square Law for 127 dba, with formula distance 1, being 10 feet and formula distance 2, being one-half mile from pits at 2640 feet, the exterior dba level in residential areas would be 78.56 dba. If formula distance 2 is reduced to 0.3 miles 1584 feet, the closest residential and business areas, the exterior noise levels would be 83.04 dba. See attachment #2.

The city of Lompoc General Plan, states the exterior noise levels at the property line should not exceed 60 dba. See attachment #1.

a. The noise levels for the Motorsports Park are not consistent with the 2030 General Plan noise element, policy 1.1 on page N-9 states that "The City shall require each land use to maintain noise levels at their property line in compliance with City standards". That to me means the fenced area of the Motorsports Park. Not the Lompoc City residential and commercial buildings areas.
b. Policy 2.3 states "The City shall minimize noise exposure in the vicinity of the Lompoc Airport by maintaining consistency with the adopted Lompoc Airport Master Plan." The Motorsports Park is not in any way consistent with the Airport Master Plan.
c. Policy 2.4 states "The City shall continue to enforce its Noise Ordinance to minimize noise conflicts between adjacent land uses. The Noise Ordinance establishes noise limits that cannot be exceeded at the property line." As you will note in my noise calculations and even with the incorrect computer generated data, the Motorsports Park does not conform at the property line fence.

4. Relative to pollution, as noted in the EIR, there would be a problem with NOx emissions, that cannot be reduced to less than significant. This means that air quality will be demonstrably worse and reduce the quality of life for all of the community. The EIR did not find significant all the dust kicked up by the motor bike riders, with events 20 times per hour, this would not be eliminated by watering. Anyone that has been to a motor cycle off-track race can attest to the amount of dirt kicked up by the tires on each turn and straight-away. The drag strip races also have similar problems with the particles of rubber peeled off with each race start and stop. That plus the noxious rubber burning smoke, smell of the fuel, and exhaust. Rain and watering of the area will create polluted run-off into non-lined catch basins that will leach into the valley ground water. All this dust, dirt and pollution will impact the airport buildings and aircraft, causing additional cost to the airport.

5. The 10 foot river embankment has been often stated as a natural wall that will block sound from going to the South of the drag strip. If you look at the actual Math involved as noted on Attachment #3 this is true to a very limited degree. If you start looking at the drag strip location

relative to the embankment, and the decreasing angle as the drag strip moves at least 50 feet from the embankment, the 10 foot embankment is fast reduced to less than a 2 foot effective embankment. Look at the Math. Another problem will be once the trees and vegetation are stripped from the embankment it will be prone to flood water eating the embankment and also George Miller drive. In the past when the river flooded airport buildings, the embankment protected the road and airport building structures. EIR did not address past flooding that also covered Highway 1, the old drive in theater and prison lands.

6. The public address loud speakers will also contribute to noise pollution, unlike a football game that are short lived, the 9 AM to 10 PM, every day of the week, will not go away, and sound will carry thru-out the valley. The EIR does not address the impact to aircraft landings due to the distraction of the lights, glare and crowd traffic. Only stating that lights will be on poles with some cover.

7. Traffic estimated in the EIR for a drag race is stated as 1160 vehicles and 2700 people. If you Conclude that this could add 8 cars per block of city traffic, it would equate to an additional 145 blocks of traffic congestion in the city, this is not an insignificant amount, as noted in EIR. Visualize traffic on H, Central, O and V streets blocking up with even 145 additional blocks of traffic congestion, does this sound like an insignificant problem for major streets.

8. The Sky Dive operation at the airport provides up to 8,000 people that come to Lompoc to participate in clean activities that are conforming and associated with the airport. They have a known positive history, add to the tax base of the city, utilize the motels and restaurants. The Motorsports Park is not in any way a clean, conforming, or associating activity with the airport, and would create impacts with the daily operation of the airport. Problems, such as dust and dirt blowing into, and on the airplanes, distracting lights, and congestion on the access road to the airport. The impacts to the existing landing area for the Sky Dive operation, and even worse the possible loss to Lompoc of a real business, that does not want a free ride using city money. Remember the multiple statements by the Motorsports Park association that the Motorsports Park will not cost the city any money. Although in fact they have already received two checks for over $60, 000 and $70,000 authorized by the City Council. I just learned that the $60,000 check has been paid back to the city. Who knows how much more money the Motorsports Park will want from the city, just to get started, let alone to keep operating. One big question not addressed in the EIR, is how the Motorsports Park that does not have funds to cover initial start-up expenses, will have the funds to mitigate all the problem areas in the EIR, without additional money from the city. The big question for the city Planning and Council, is would they be financing any other commercial development, of any kind, that came with their hand out. In this case we have an ill-funded organization that is pushing an airport non-conforming and controversial project on the city. A much bigger question is how the ill-funded Motorsports Park, will be able to even sustain the park if built, and procure insurance to cover accident and liability. In reading the EIR data, I learned that the Motorsports Park plans to deed back to the city the project at completion. This would create unlimited liability to the city voters for the high risk park activities, as the deep pockets, for law suits of every type. Why would the city fathers

want to subject the Lompoc Valley voters to these potential problems.

9. The city needs to not only look at the current EIR problems, but also the long term liabilities and cost to the city and its image. Speaking of image, let's discuss Lompoc that has an image of a clean, quiet and peaceful city that has always had the best interest of the citizens at heart. The City Planning and City Council have always vetted future business to ensure that they meet the image of the city. Let's look at Bakersfield, CA one of the few cities in California, that still has a drag strip, that has not been shut-down by noise and pollution law suits. Citizens from numerous California cities have proven in class actions court suites that they do not have to exist with incompatible land use. Bakersfield was smart enough to build the drag strip over 10 miles from the city of Bakersfield. In an area with access to a major freeway, with highway exits that would not que up traffic on city streets, or contribute to city noise and traffic pollution. Maybe Lompoc can learn by the 10 mile separation of non-conforming uses, rather than the current proposed airport location with no separation from airport and 0.3 mile separation from residential and commercial areas. The EIR does not consider the planned housing development of up to 400 hundred additional houses in the Lompoc Y area, just North of the proposed Motorsports Park. They will also be affected by the noise, pollution and problems associated with the Motorsports Park. The EIR did not effectively present the case for another location at least 10 miles from residential and commercial buildings.

10. The Motorsports Park plans to occupy a major portion of the Zone 6 area to the North side of the runways, that is currently designated as an emergency safety zone for problem landings or take-offs. The Motorsports Park plans to install the major portion of the drag strip and motorcycle park, including non-conforming stadium seating, lights, and other non-conforming modifications, not allowed by the Airport Master Plan. The EIR did not address this impact to the obstructing of the emergency landing area, that could result in major loss of life in an aircraft accident.

11. The EIR is written to GAME every aspect of reality, with insignificant findings being the answer to most every problem. This is rationalized by producing a basis of estimate based on noise samples not based on facts, incorrectly sampled using natural barriers, like hillsides, buildings, etc. Look at the noise graphs and locate the minimum noise areas selected for most of the readings. They should have been looking for locations that would record the actual PEAK noise levels, and not averaging them. The EIR does not address the fact that the Motorsports Park would not be allowed due to the non-compliance with the 2030 General Plan, noise limits at its property line. The EIR Airport objectives do not address factual statements relative to the impact on the Airport Master Plan, with major distortions of the actual facts relative to impacts on the Airport operation. The real facts are that the Motorsports Park is inconsistent in every way with the Airport and the Lompoc Valley voters. If you now look at all the environmental impacts, coupled with the above, what are the advantages of the Motorsports Park to the Lompoc Valley. The EIR does not address the possible loss in home values, with some estimates up to $30,000, due to the problems created by the Motorsports Park. If the Motorsports Park

project is ever approved and implemented, I estimate that many Lompoc Valley and adjacent residents, may not wish to exist with an incompatible land use in their neighborhoods, that effects their rights, both physical and legal.

 Attachment #1

Estimating Sound Levels With the Inverse Square Law

In the real world, the inverse square law is always an idealization because it assumes exactly equal sound propagation in all directions. If there are reflective surfaces in the sound field, then reflected sounds will add to the directed sound and you will get more sound at a field location than the inverse square law predicts. If there are barriers between the source and the point of measurement, you may get less than the inverse square law predicts. Nevertheless, the inverse square law is the logical first estimate of the sound you would get at a distant point in a reasonably open area.

If you measure a sound level $I_1 =$ 127 dB
at distance
$d_1 =$ 3.048 m = 10 ft

$$\frac{I_2}{I_1} = \left[\frac{d_1}{d_2}\right]^2$$

then at distance
$d_2 =$ 804.672 m = 2640 ft

the inverse square law predicts a sound level
$I_2 =$ 78.56792146 dB

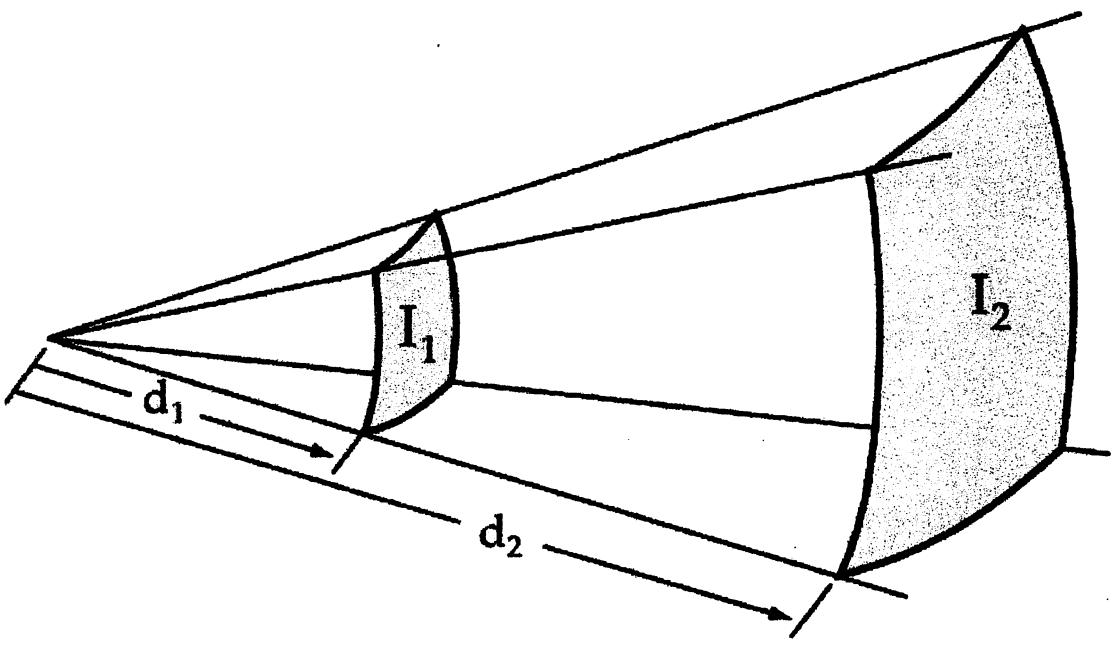

You can explore numerically to confirm that doubling the distance drops the intensity by about 6 dB and that 10 times the distance drops the intensity by 20 dB.

Decibel definition | Decibel calculation
Calculating dB for distance ratios

Index

Auditorium acoustics

 ATTACHMENT #2

Estimating Sound Levels With the Inverse Square Law

In the real world, the inverse square law is always an idealization because it assumes exactly equal sound propagation in all directions. If there are reflective surfaces in the sound field, then reflected sounds will add to the directed sound and you will get more sound at a field location than the inverse square law predicts. If there are barriers between the source and the point of measurement, you may get less than the inverse square law predicts. Nevertheless, the inverse square law is the logical first estimate of the sound you would get at a distant point in a reasonably open area.

If you measure a sound level $I_1 =$ 127 dB
at distance
$d_1 =$ 3.048 m = 10 ft

$$\frac{I_2}{I_1} = \left[\frac{d_1}{d_2}\right]^2$$

then at distance
$d_2 =$ 482.8032 m = 1584 ft

the inverse square law predicts a sound level
$I_2 =$ 83.00489645 dB

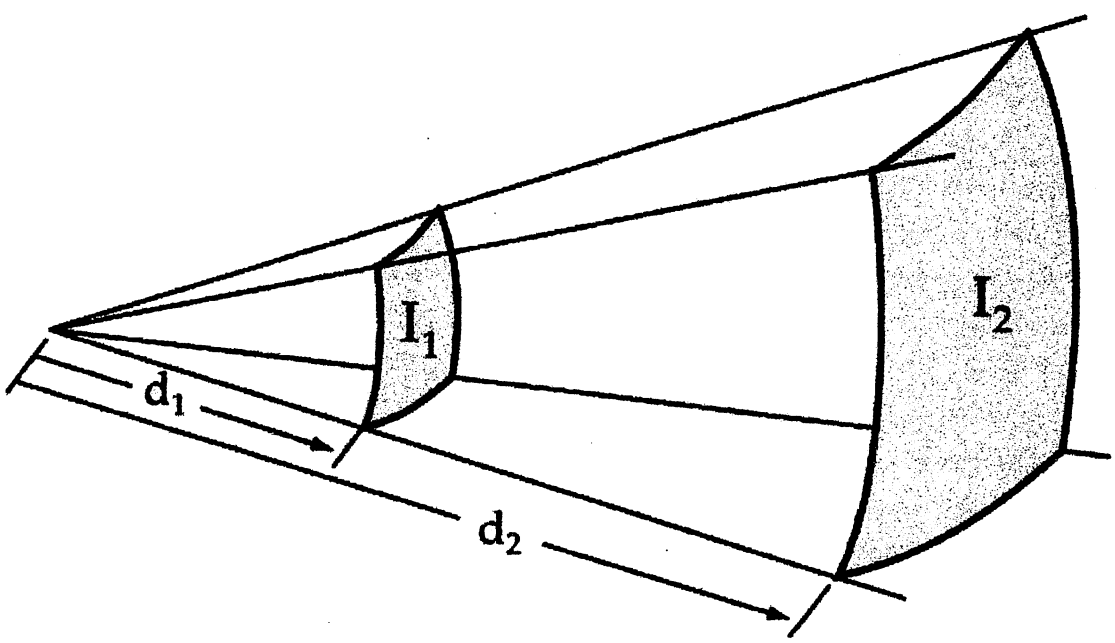

You can explore numerically to confirm that doubling the distance drops the intensity by about 6 dB and that 10 times the distance drops the intensity by 20 dB.

Decibel definition | Decibel calculation
Calculating dB for distance ratios

Index

Auditorium acoustics

Attachment #3

Equivalent of 10 Foot embankment as Drag Strip to embankment distance increases.

Note At 10 Feet distance to embankment you would have 10 Foot equivalent.
At 50 Feet distance to the embankment you would have 2 Foot equivalent.

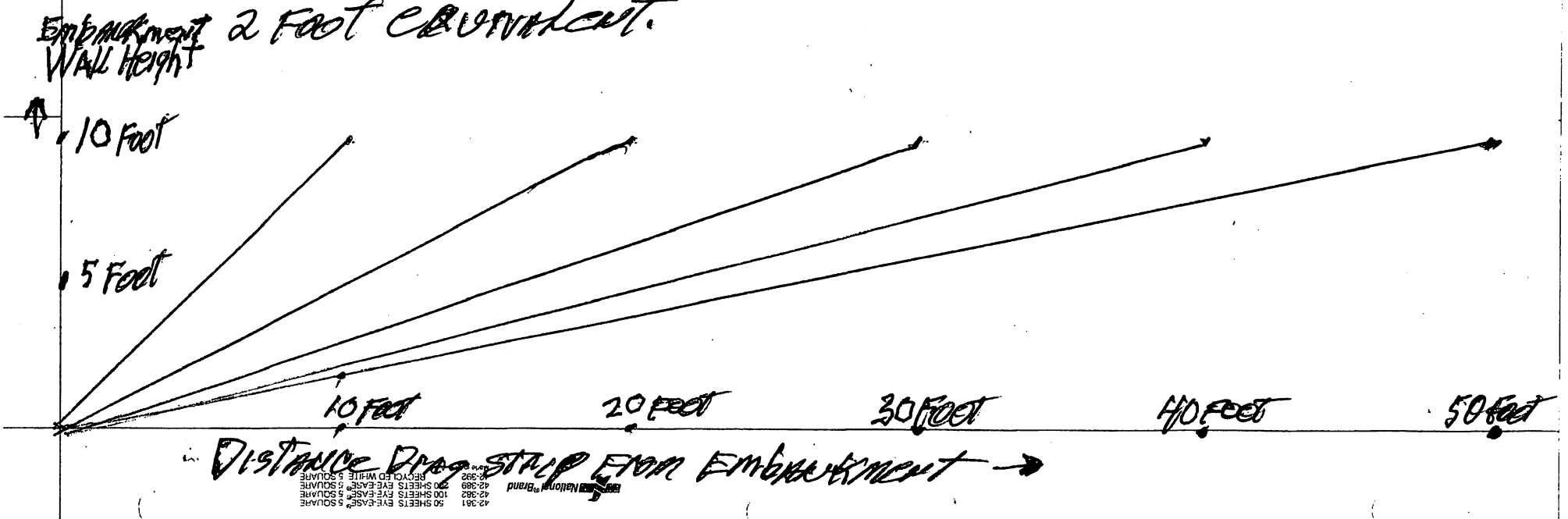

Weigel, Cherridah

From: Breese, Lucille
Sent: Wednesday, August 10, 2016 2:06 PM
To: Weigel, Cherridah
Subject: FW: Motorsports Park-Wyckoff EIR Response

From: rewyckoff [mailto:rewyckoff@verizon.net]
Sent: Wednesday, August 10, 2016 11:00 AM
To: Breese, Lucille
Subject: Motorsports Park-Wyckoff EIR Response

11 Aug 2016 Motorsports Park EIR Response from **Robert and Eileen Wyckoff, 4346 Aquarius Rd., Lompoc, CA 93436**

City Project No. EIR 15-01 / CUP 14-01

1) **Mitigation Requirements**:

The Mitigation Requirements pertaining to the Motorsports Park proposed location on the Lompoc Airport property requires a 72.4 land purchase and replacement of the trees at a multiple of those taken out as well as a five-year nurturing period. This constitutes a very high outlay of funds upfront and is for a land use not related to aviation purposes. Who will pay for this; the city? For the last 30 years Airport Improvement Projects (AIP's), including the repaving of George Miller Drive, have been funded primarily by FAA funds. However, these grants are only for projects related to aviation, so they will not be available for this project. Again, who will pay this substantial amount?

2) **Impact on Aviation Operations:**

Skydive Santa Barbara has operated safely from Lompoc Airport for many years and uses part of the land to be provided to the Motorsports Park for its skydive recovery area. This incursion will force Skydive Santa Barbara to relocate this operation, thus depriving the Lompoc Airport of the rent for hangar space and considerable fuel sales for the benefit of a non-aviation-related activity.

3) **Noise:**

Noise generated by aircraft taking off and landing (power off for this) is infrequent and transitory. Noise from the Motorsports Park activities will be loud, static, and prolonged. The noise will travel all over the city and up the surrounding residential hillsides.

4) **Access:**

George Miller Drive is inadequate to Motorsports Park needs and was last repaved by the FAA. It is already congested on weekends with aviation-centered activities. The FAA will not be a source of relief of crowding due to non-aviation-related activities.

5) **Light pollution:**

Motorsports Park lighting for night events will be a distraction to pilots during night time takeoffs and landings. This is a significant safety concern.

6) **Land Use and Planning:**

The Motorsports Park is not addressed in the Airport Master Plan and it will require replacement of the Airport Master Plan at significant additional expense.

Unable to sign electronically. Please call 805-733-4635 or 588-0805 if signatures are required.

RECEIVED

AUG 10 2016

Planning Division

RECEIVED

AUG 1 0 2016

Planning Division

Date: August 10, 2016

To: Lucille Breese, Planning Manager, City of Lompoc, CA

From: Terry Hammons

Subject: Comments to Draft Environmental Impact Report - Motorsports Park Project

Aesthetics

Impact from Lighting:

"light emitted by on-site usage would not be substantially projected off the proposed Project site and would be confined to the internal boundaries of the proposed Project."

This is a questionable finding. The lighting proposed could be a hazard to pilots at night. This lighting may be annoyance neighborhoods, commercial areas, and surrounding areas well beyond the park. This image is taken from the Draft EIR. It illustrates the projection of light from the proposed park.

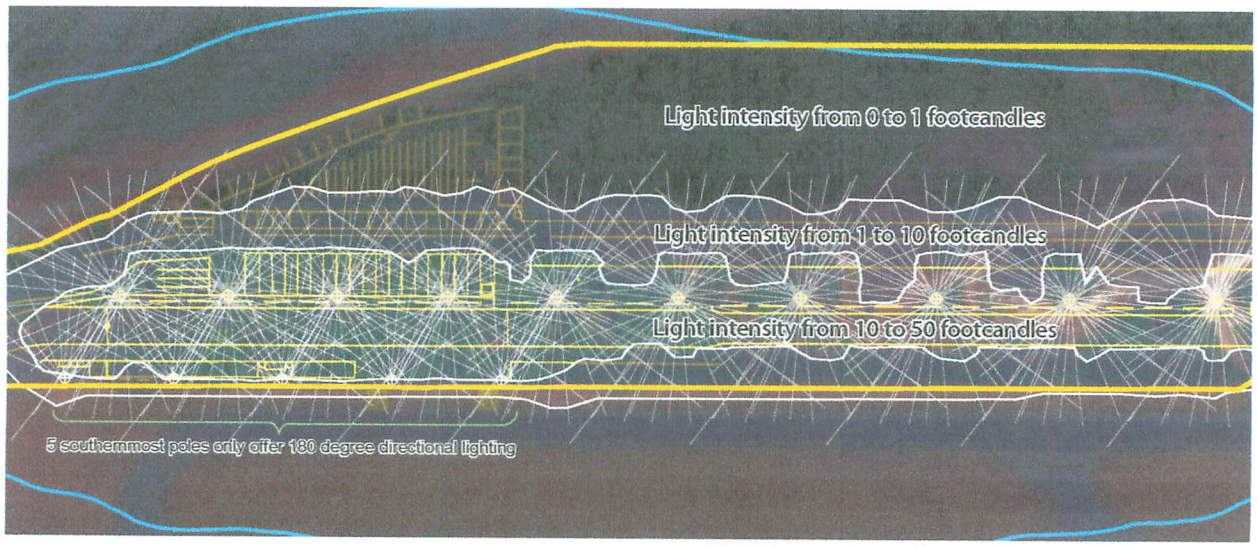

It is the assumption in the Draft EIR that the light would be contained on site, but there is no sampling or evidence of that in the report. This statement from the Draft EIR is suspiciously conflicting "However, light emitted by on-site usage <u>would not be substantially projected off the Project site</u> and would be confined to the internal boundaries of the proposed Project." It is then further stated, "Sources of glare would include vehicles traveling to the proposed Project site and from the permanent maintenance and storage building and temporary structures." Both of these statements do not provide assurance the lighting of this project will <u>not</u> be a disturbance and an annoyance to the surrounding area.

This is addressed further in Land Use and Planning.

Air Quality

The proposed Project would employ up to 40 employees by 2020, which would account for less than 1 percent of the projected growth in the region and would fall within the projected growth in the City between 2008 and 2020. Furthermore, the proposed Project would permit similar recreational uses as those currently permitted by existing zoning for the proposed Project site. The proposed Project would also be consistent with the City's General Plan Conservation Element goals and policies to minimize air quality impacts resulting from construction and development activities regulated by the City using current recommendations from SBCAPCD conditions and implementing the City's grading ordinance; the proposed Project would minimize vehicle-related air quality impacts; and would remain consistent with draft framework thresholds for per service population emissions. Accordingly, the proposed Project would be consistent with the employment projections within the 2013 Clean Air Plan (CAP) and the 2012 Regional Growth Forecast and impacts would be less than significant.

This statement has not been vetted in any analysis by the City, or third party as to a marketing analysis and/or a business valuation. Where in any independent report is there an analysis of the revenue, employment, and other economic benefits this project will provide to the community? The findings in Air Quality will diminish the revenues from this project by limiting the use of off highway riding areas.

4.2-1

A Fugitive Dust Control Plan shall be prepared and submitted to the City of Lompoc and Santa Barbara County Air Pollution Control District (SBAPCD) for review and approval, before operation of the proposed motorsports park facility. The Fugitive Dust Control Plan shall be implemented and shall include measures to control emissions of airborne particulate matter associated with onsite off-highway vehicle (OHV) and drag strip activities sufficient to ensure particulate matter is below the 8 ug/m^3 threshold. Measures to be included in the Fugitive Dust Control plan to control operational emissions shall include, but are not limited to, the following:

-Onsite access roads extending from George Millar Drive and V Street shall be paved.

-The Open Riding and Trail area shall be limited to 14 OHVs per hour.

-All ground surfaces with OHV activities shall be watered by an amended water agent to achieve a minimum control efficiency of 84 percent.

This impact will cause areas in and around the project to have serious issues with air quality. It will also have a financial impact that will effect the benefit to the airport - an enterprise of the City of Lompoc, neighborhoods and commercial areas.

4.2-1

The motorsports operator shall limit the number of OHV vehicles, OHV races, and length of OHV events based on the anticipated weekend events for concurrent operation of the Oval Cart Track and Stadium Cross events in accordance with the following requirements:

-Restrict the operation of the oval cart track events to 2 races per hour for 6 hours each weekend day.

-Restrict the operation of stadium cross events to 2 races per hour for 6 hours each weekend day.

These restrictions will have a negative effect on the financial benefit to airport and conflicts with the Business Plan the Foundation submitted to the city.

4.2-3

When the Oval Cart Track and Stadium Cross events are not in operation, the motorsports operator shall limit the number of OHV vehicles, OHV races, and OHV events based on the anticipated weekend events for only the Enduro Cross event in accordance with the following requirement:

-Restrict the endurocross track events to 2 races per hour for 6 hours each weekend day.

This will have a negative effect to the financial benefit to the airport and conflicts with the Business Plan of the Foundation submitted to the city May 23, 2012:

Lompoc Valley Motorsports Park Project

A Sub-Committee of the Lompoc Parks, Recreation, and Pool Foundation Inc.

MOTORSPORTS PARK RACELOMPOC.COM

Off Road Event Income Year One

COURSE OPERATIONS - On a per/event basis

ASSUMPTIONS

- Based on 40 annual events
- Based on 40 vehicles/riders per event (w/6% growth)
- Based on an average of 80 crewmen/spectators per event (w/7% growth)
- Based on an in-house ambulance w/ track EMTs
- Insurance (apportioned)
- Phone bill (apportioned)

INCOME	Year 1	Year 2	Year 3	year 4	Year 5
40 Entries @ $32 each (w/ 6% growth)	$1,280	$1,357	$1,438	$1,525	$1,616
80 Crewmen/Spectators @ $12 each (w/ 7% growth)	$960	$1,027	$1,099	$1,176	$1,258
Concessions/Souvenir (Net) (w/ 7% growth)	$300	$321	$343	$368	$393
Event Operating Income	$2,540	$2,705	$2,880	$3,069	$3,267
Less Operating Expenses	$530	$545	$560	$577	$595
Total Per Event Profit	$2,010	$2,160	$2,320	$2,492	$2,672
X Events	4	6	6	6	6
Annual Income	$8,040	$12,960	$13,920	$14,952	$16,032

4.2-4

When the Oval Cart Track and Stadium Cross events or the Enduro Cross Only events are not in operation, the motorsports operator shall limit the number of OHV vehicles, OHV races, and OHV events based on the anticipated weekend events for only the Motor Cross event in accordance with the following requirement:

-Restrict motorcross events to 18 vehicles with 1 race per hour for 3 hours each weekend day.

This will have a negative effect to the financial benefit to the airport.

These are the proposed mitigations to Air Quality:

Significant and unavoidable for VOC and NOx.

Because of this finding, this makes this project questionable for financial feasibility and viability.

Biological Resources

4.3-1

To offset impacts to AWT (Arroyo Willow Thicket) on site (14.5 acres), off-site mitigation will be implemented at a 5 to 1 ratio for a total of 72.5 acres (14.5 acres of impacted AWT at a 5 to 1 ratio equals 72.5 acres). That acreage includes 0.5 acres of AWT that currently exists within the Runway Expansion Project mitigation area that has been previously designated on site; however, as noted, the mitigation for the Runway Expansion Project was not successful, so no credit is given for that mitigation.4

Mitigation may be conducted adjacent to the proposed Project in remaining AWT, and/or at appropriate off-site properties. If off-site locations are considered, then they should have similar habitat conditions, including, elevation, topography, soil conditions, moisture regimes, vegetation composition, percent cover and proximity to the Santa Ynez River.

Mitigation shall be provided for through the development of a Restoration and Mitigation Plan (Plan). The Plan will compare the performance of the mitigation area against the recommended performance criteria to identify any shortcomings or problems in the mitigation area. The Plan will include methods for evaluation of plant establishment, vigor, and health, and for evaluating the percent cover by native and non-native plant species. In addition, the Plan will include specific details on a planting palette invasive species removal and methods for planting and irrigation. The following is a preliminary conceptual planting palette and schedule of success criteria. The planting palette and success criteria may change and will be adapted to site specific conditions when a final off-site mitigation area is selected. The Plan should provide for quarterly

monitoring visits during the first year, biannual visits during the second and third years, and annual visits during the fourth and fifth years.

The Plan will be developed in consultation with City of Lompoc and submitted to the CDFW for review and concurrence at least 30 days prior to beginning construction. (The planting palette is described in the Draft EIR, page 2.0-18 through 2.0-20)

The land area for this mitigation needs be in ownership by the City of Lompoc before any construction begins. This will assure full environmental compliance with regard to the land area requirement. However, will this mitigation require an Environmental Impact Report?

4.3-7

Proposed Project construction activities within CDFW jurisdiction (AWT) will require a Lake and Streambed Alteration Agreement (SAA) pursuant to Section 1602. An SAA will be obtained from CDFW (South Coast Region) prior to proposed Project implementation, and may be require mitigation.

The Lake and Streambed Alteration Agreement will need to be requirement before any construction begins.

Project Impact:

The Santa Ynez River is a direct tributary to the Pacific Ocean and is considered non-wetland Waters of the U.S.; however, its streambed is within CDFW jurisdiction. Therefore, the 14.5 acres of AWT is considered a riparian habitat associated with the Santa Ynez River and is under the jurisdiction of the CDFW pursuant to Section 1602 of the Fish and Game Code. Therefore, impacts would be potentially significant.

The proposed Project is designed such that surface water runoff will be directed into two infiltration basins on site that extend along the drag strip and return road. All surface water runoff would be captured in these two areas with no runoff drainage into the Santa Ynez River. Therefore, potential indirect impacts surface water runoff within the Santa Ynez River watershed would be less than significant.

The proposed Project is designed such that surface water runoff will be directed into two infiltration basins on site that extend along the drag strip and return road. All surface water runoff would be captured in these two areas with no runoff drainage into the Santa Ynez River. Therefore, potential indirect impacts surface water runoff within the Santa Ynez River watershed would be less than significant.

This is the proposed mitigations to capture Stormwater runoff:

Surface water runoff would be directed to two infiltration basins extending on either side of the drag strip and return road, as illustrated in Figure 3.0-11. All surface water runoff would be captured in these two areas with no runoff draining to the Santa Ynez River. Those areas include:

> *- Infiltration Area A would cover an area approximately 44,300-square feet in size, with an average depth of 1 inch, and would contain approximately 3,560 cubic feet (cu. ft.) of stormwater.*
>
> *-Area B would be approximately 34,500-square feet in size, with an average depth of 3.6-inches, and would contain approximately 10,270-cu. ft. of stormwater.*
> *Together, those areas would provide a total of approximately 13,830 cu. ft. of stormwater capture.*

This proposed mitigation is wholly inefficient to capture runoff and would not serve as a percolation system for the park area. Note the depths of each basin, one inch (1) and three and one half (3 1/2) inches respective. It is suggested that if the park is approved for construction there be drainage, retention and water systems designed and constructed that would retain all runoff to prevent drainage into the river. And, should the park be approved, a study, a project plan and construction plans should required to have all drainage from the Airport comply with current regulations and laws for stormwater retention.

Cultural Resources:

There is a likelihood of Chumash or other archeological remains in this area of the project. Because of this likelihood, there should be an Archeologist on-site during all stages of the construction. Despite the Draft EIR, the Chumash Tribe are believed to have inhabited all areas along the river, valleys and coastline of of Central California.

Geology and Soils

Page 2.0-29

"The proposed Project site consists of an abandoned industrial site that includes dirt roads, former building slabs, debris from prior uses, ...and potentially up to four underground storage tanks (USTs). Given that construction would involve removal of vegetation and grading of the site, soil would be exposed and could be subject to erosion, especially during times of heavy rainfall or high winds.

A subsurface geological survey should be required. The UST's need to be investigated to remove any doubt of what they may contain because of possible disturbance to the area during construction and operation of the park.

Surface water runoff would be directed to two infiltration basins extending on either side of the proposed drag strip and return road, as illustrated in Figure 3.0-11, Conceptual Grading Plan. All surface water runoff would be captured in these two areas with no runoff draining to the Santa Ynez River. Those areas include:

-Infiltration Area A would cover an area approximately 44,300-square feet in size, with an average depth of 1 inch, and would contain approximately 3,560 cubic feet of stormwater.

-Area B would be approximately 34,500-square feet in size, with an average depth of 3.6-inches, and would contain approximately 10,270-cubic feet of stormwater.

A General Permit for Storm Water Discharges Associated with Construction Activities is required because the proposed Project would occur over an area greater than 1 acre. The applicant must also develop and implement a Storm Water Pollution Prevention Plan (SWPPP) that would employ Best Management Practices (BMPs) to prevent both the erosion of on-site soils and the discharge off-site of on-site soils. Furthermore, the Lompoc Municipal Code requires the submittal of an Erosion Sediment Control Plan and/or SWPPP with the submittal of a grading permit application.

These requirements need to be in place before any construction begins for the entire project - Off Highway Vehicle Area and Drag Strip. <u>There should be no separation of the areas of this project with regard to environmental impacts.</u> The developer of this park has proposed phasing of construction, <u>but that should not include phasing of the environmental requirements</u>.

Operational features such as watered OHV tracks and a paved drag strip would also prevent erosion and control dust. Therefore, as a result of adherence to Lompoc Municipal Code for sediment and erosion control and SBCAPCD Rule 345, soil erosion impacts would be less than significant.

The "watering" of the OHV area is in conflict with the state, county and city policy for water conservation. Although not addressed in this study, rate payers in the city have had increases for the last three years for water and wastewater. There is an additional two more years these rate increases. To use water for dust control on a project that has not been determined to be feasible or viable is not good planning.

The proposal above is questionable. The depths of each basin does appear to be adequate for retention and it is likely these basins will not prevent flooding into the river area. These basins are planned for construction in the floodplain, This needs further analysis.

The proposed Project site is comprised of soils with alluvial deposits, making it susceptible to seismically induced settlement. Additionally, since groundwater depths were found to be as shallow as 29 feet bgs on the proposed Project site, the potential for ground collapse and other adverse effects due to subsidence is considered potentially significant.

The developer has proposed to install used donated bleachers. Will these bleachers be assessed for safety and use in this potential "seismic area."

Greenhouse Gas Emission

The proposed Project would incorporate measures that reduce GHG emissions. The proposed Project would incorporate energy and water efficiency design features to enhance efficiency in all aspects of the proposed Project's life-cycle. These designs would increase the structures energy efficiency, water efficiency, and overall sustainability. Because the proposed Project achieves an efficient service population target, the proposed Project would be consistent with the 2035 reduction in GHG emissions from 1990 levels set forth in the 2008 Scoping Plan and 2014 Updated Scoping Plan. Therefore, impacts would be less than significant.

This statement, "The proposed Project would incorporate energy and water efficiency design features to enhance efficiency in all aspects of the proposed Project's life-cycle," is in conflict with conservation of emissions and water. This project will add more vehicle emissions and not conserve water. Note Air Quality finding - water would be used for dust control.

Hazards and Hazardous Waste

Construction activities for the proposed Project would involve the transportation of hazardous substances that would be used on site such as paints, solvents, cleaners, cements, glues, and fuels. In addition, the Project operation would store and utilize hazardous materials on site such as fuels, oils, solvents, and other materials. Proposed Project site participants, spectators, and employees can potentially be exposed to such hazardous materials as a result of accidents or improper use. A variety of state and federal laws govern the generation, treatment, and/or disposal of hazardous wastes. Construction and operation of the proposed Project would not result in significant impacts in relation to exposure of hazardous materials in compliance with such regulatory measures.

This project places hazards in the area of the Santa Ynez River. The potential of contamination is greatly increased because of the amount of hazardous material that will brought in, used on site, the number of people being exposed to these materials and acknowledged in the EIR with this statement: "Further, the transportation of hazardous materials to and from the site may

potentially impact proposed Project site visitors and residents located along roadways used for delivery."

The proposed Project site does not contain any known USTs, <u>however, grading and excavation of the site may uncover any unknown USTs. Therefore, impacts to the release of hazardous materials would be potentially significant.</u>

The above is cautionary with the findings contained in JHA's Environmental Inc.'s report. This is stated on page 11 of that report:

5.0 DISCUSSION OF MITIGATION MEASURES

A subsurface geophysical survey could be undertaken near suspected locations of historic USTs and particularly in the area of the 3-inch-diameter pipes. If anomalies are identified, the soil over the anomaly should be carefully excavated to determine the exact nature of the anomaly. If a UST is confirmed, a permit to remove the UST should be acquired from the County of Santa Barbara Heath Department that will include the collection of soil samples from beneath the UST for laboratory analyses. If a release of petroleum hydrocarbons is confirmed, soil assessment and remediation would be undertaken with oversight from the regulatory agency.

If no UST is identified on the Site at a minimum a Soil Management Plan (SMP) should be prepared. The SMP would describe the methods to be implemented to protect the health and safety of the construction workers working on the Proposed Project and the health and safety of the general public during the proposed on-Site soil grading/excavation activities required for the Proposed Project. The SMP would provide the methodology for the grading contractor to deal with any suspect subsurface structures, debris, stained, or odiferous soil that might be encountered and that could represent a hazard to the workers or the public.

PHOTOGRAPH 5 – View looking north at two 3-inch-diameter pipe extending from the ground inside the dirt road loop on the south side of the main dirt road in the general area of the reported former asphalt batch plant. These two pipes and the ones nearby shown in Photograph 6 (below) are reportedly associated with an underground storage tank; however, no evidence of a UST was observed in the area.

PHOTOGRAPH 6 – View looking at the second set of 3-inch-diameter streel pipes extending from the ground. The four pipes are not typical of those associated with a gasoline or diesel fuel UST.

Hydrology Water Quality

In that this project is planned for construction in the "floodplain," will this be permitted by those agencies that have regulatory authority of land and water in the area of the Santa Ynez River. i.e. requirements for Lake and Streambed Alteration Agreement, permits for detention/retention basins and other required permits? (see Project Impacts)

These are noted in the Project Impacts:

Compliance with the appropriate National Pollution Discharge Elimination System (NPDES) requirements, implementation of a Storm Water Pollution Prevention Plan (SWPPP) with BMPs or the submittal of an Erosion Sediment Control Plan would reduce potential water quality impacts to less than significant.

As stated above, the depth of the proposed retention basins will not be sufficient to assure no runoff from the project site. The depth of one (1) inch and three and one half (3 1/2) is questionable in retention capacity and in the event of a flood this could potentially allow hazardous materials to leak and runoff into the river area as well as exacerbating flooding.

This image from the Draft EIR illustrates the area of 100 year floodplain.

The project site is completely within the 100 year floodplain. By encroaching into the floodplain, without constructing other protections, this may cause further erosion and flooding in the site, near and down river from the project site. Consequently, this study needs to address flooding and

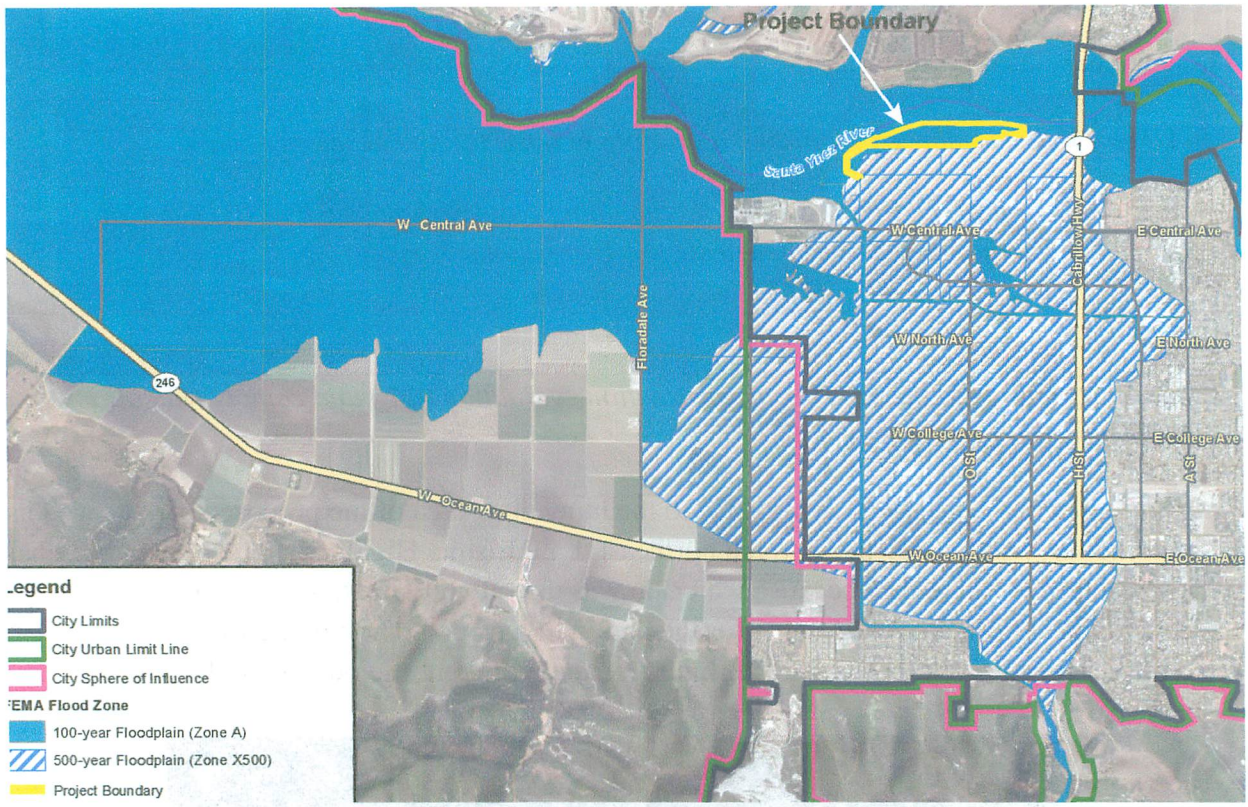

protections that may need to be constructed beyond the project site to prevent further damage to the river. (Reference Santa Ynez River Bank Protection Evaluation, City of Lompoc, January 20, 2011)

This is mentioned in the Notice of Preparation comment letter from the Environmental Defense Center, January 11, 2016, page 11:

D. <u>Effectiveness of Sediment/Detention Basins located on Potential Floodplain</u>

The site is "within an existing FEMA-designated flood inundation area."[45] The EIR should therefore evaluate and disclose whether the Project site is located in a floodplain or floodway and whether this makes a storm water detention basin less effective at mitigating runoff and water quality impacts. If a storm water basin is required to mitigate water quality or runoff impacts, the EIR should disclose any effects of such a basin, and should evaluate whether the Project configuration allows space for a basin to substantially lessen potentially significant water pollution impacts.

This EIR study needs to address issues in the final report "An Assessment of Potential Restoration Actions to Enhance the Ecological Functions of the Lower Santa Ynez River Estuary" with regard to the aggregate impacts the Motorsports Park will have on the lower area of the river. This study has not addressed those impacts.

Land Use and Planning

These are the stated mitigations:

4.9-1 *Prior to the issuance of building a grading permits the site developer shall:*

-Restrict the height of the lighting standard including any overhang such as light shielding, fixtures, etc. such that they do not penetrate the Transitional Surface;

or

Submit all structures to the FAA for an obstruction evaluation (OE) and comply with all FAA requirements resulting from the OE.

The lighting at night will be a disturbance to the immediate area of the proposed park as well as neighborhoods, particularly those to the northeast, La Purisima Highlands. The beacon light has had to be adjusted in the past because the beam was directly into the homes on the perimeter of the development. The proposed lights for the park will have to be highly illuminative to be effective for the the park, but very disturbing and annoying to those outside of the park area.

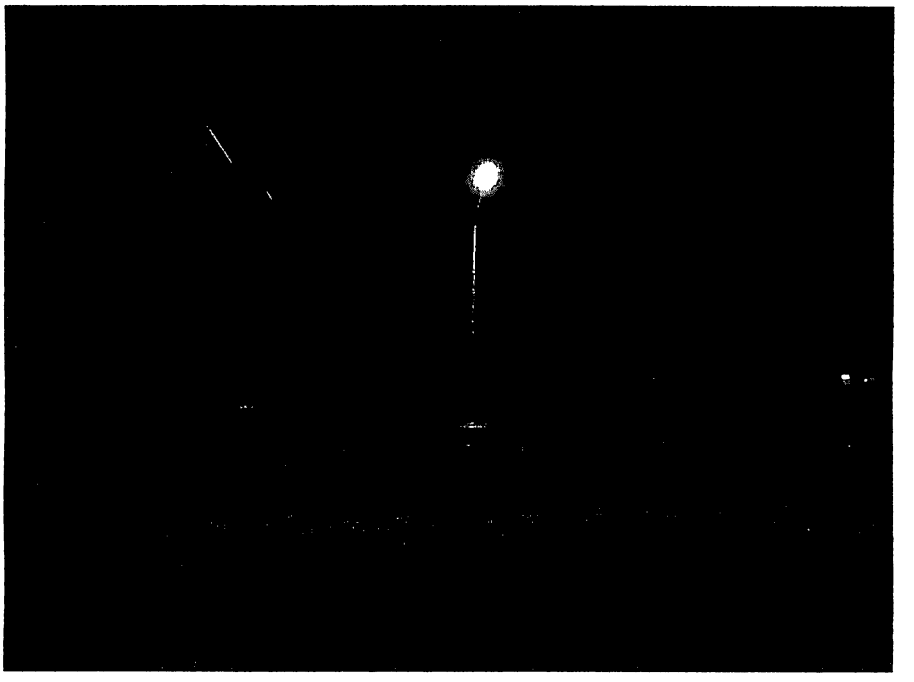

This is a night shot taken at 11:59pm. It clearly demonstrates the illumination and potential annoyance lighting may have on the surrounding area of this proposed project.

Because there has been no sampling of the lights, there needs to be a study and sampling in the proposed project area to determine disturbance and effectiveness.

4.9-2 *Prior to the use of V Street access way, the developer shall construct a height-restricting barrier over the entry-way to the proposed Project site's access point on "V" Street and the Approach/Departure Surface are such that it restricts access to vehicles to more than 12 and 1/2 feet including antennas, roof racks and roof top carriers.*

As a secondary option to the height-restricting barrier, the Project applicant shall lower the V Street access elevation to 15.5 feet below the existing elevation of the Approach/Departure Surface such that vehicles less than 22.5 feet including antennas, roof racks, and roof top carriers will not penetrate the Approach/Departure Surface.

Because travel trailers, recreational vehicles and semi trucks with trailers have an average height of 10 feet or more without air conditioners, roof racks, roof top carriers, and other roof top accessories, the height limitation may well require the second option to assure all vehicles can access that area of V Street.

4.9-3 *As part of the Conditional Use Permit process, the City, as the operator of the airport, shall develop and implement an educational program to inform airport users, including pilots and skydivers, of activities on the motorsport park site.*

This needs to be addressed in the Final EIR as to how this educational program will be implemented.

4.9-4 *The applicant shall either:*

-Eliminate the proposed sky diving drop zone (DZ) area on the western end of Runway 7/25

or

-Identify an alternative location for use as a DZ outside of any FAA restrictive use zones (i.e, Approach/Departure or Transitional Zones) for the proposed DZ area on the western end of Runway 7/25

or

-For any DZ located with a designated FAA restrictive use area, the City shall submit a request to FAA for review and approval of such use and incorporation into the Airport Layout Plan (ALP) prior to implementation.

These options disrupt the operation of a very profitable business, Santa Barbara Skydive, at the airport. This project has not been determined to feasible or viable and without those determinations vetted by a reputable third party, any determinations effecting SB Skydive drop zone should not be considered until vetting of Motorsports Park with regard to their financial feasibility and viability.

4.9-6 *Prior to operation of the proposed Project, the applicant shall coordinate with Skydive Santa Barbara to:*

Restrict the skydive lower bench DZ operation times to occur only when OHV and drag racing events are not in session on weekends

This is an unreasonable condition to put on a business that has a legitimate right to operate at the airport. SB Skydive is aeronautically compliant with FAA, supports a city airport enterprise, is profitable and with restrictions imposed by an non aeronautical project - Motorsports Park, it would force the owner to consider moving that business to another airport. The issue has significant impacts to the owner of the skydive business and to the city. It is questionable the Motorsports Park project is a viable/feasible benefit the airport.

This statement appears on page 2.0-44:

The proposed Project site is not within the purview of any habitat conservation plan or natural community conservation plan, nor would the Project affect any area so designated, directly or indirectly. Implementation of the Project would not conflict with the provisions of any adopted conservation plan.

The above statement is not wholly true. This is taken from an Executive Summary, Audubon California, June 30, 2011:

In 2009, Audubon California retained ESA/Philip Williams and Associates to conduct a study on the hydrology of the estuary and lower floodplain and provide advice on the feasibility of restoration actions. Audubon California recently completed a report, with funds primarily provided by the California Coastal Conservancy, on an assessment of potential restoration actions on the Lower Santa Ynez River. VAFB staff provided substantial in-kind support for mapping, data collection, and historic research. Other project funders included The Nature Conservancy, California Department of Fish and Game, and US Fish and Wildlife Service.

Project partners included PRBO Conservation Science, who conducted avian studies to further our understanding of how various species utilize the estuary's habitats, and the Central Coast Regional Water Quality Control Board and Cachuma Operations and Maintenance Board, who contributed field data and equipment. As part of this effort, Audubon also initiated a stakeholder process to provide a forum for discussion of restoration opportunities among agencies, landowners and other key community members in a broader visioning process.

Our final report documents historic changes in land use, hydrology and lagoon functioning within the Lower Santa Ynez River Estuary. This analysis included an initial assessment of climate change impacts. Finally we identified a suite of potential restoration actions, provided initial cost estimates, and outlined additional work needed to implement some of these restoration strategies.

Before there is approval for this project, a full assessment should be done to determine the impacts and consequences this project will have on the areas of the river described in the Executive Summary.

Noise

Operation

This text in italic is taken from the Draft EIR. It describes the areas of the noise test, the varying levels of the test, but it does not identify the types of gasoline engines tested, the size of the engines and whether those engines were open or closed exhaust. Mr. Jason Osborne provides a contrasting opinion of the test.

The maximum noise level increases along roadways adjacent to residential, commercial, and industrial uses by proposed Project traffic would range from a low of 0.0 dB(A) (several locations throughout the vicinity of the proposed Project area) to a high of 13.7 dB(A) (along V Street, north of Central Avenue). The roadway noise levels along V Street, north of Central Avenue, would be 58.7 dB(A) CNEL and would fall below the 65 dB(A) exterior noise level standard identified for community facilities and below the 75 dB(A) exterior noise level standard identified for manufacturing uses in the General Plan Noise Element. Therefore, the proposed Project would not add traffic to these roadways that would exceed the City's exterior standard.

The maximum noise level increase along roadways adjacent to residential uses by proposed Project traffic would be 2.0 dB(A) along Central Avenue, both east and west of Barton Avenue. Noise level increases along roadway segment would be less than 3 dB(A) CNEL.

Given the existing level of traffic noise along area roadways, up to 67.4 dB(A), and aircraft noise generated by the airport with up to 60- 65 dB(A), parking lot noise would not likely be audible due to the masking of noise by traffic.

Pedestrian noise impacts are considered less than significant due to the distance of sensitive uses (0.3 miles away) and the existing ambient noise levels which range from 60 to 65 dB(A). These sources would not individually exceed the overall noise emanating from the proposed Project site.

The drag strip racing and OHV trail ride area would result in an increase in ambient noise measurements up to 2.2 dB(A). As previously discussed, changes in a noise level of less than 3 dB(A) are noticed by the human ear, while the human ear perceives a 10 dB(A) increase in sound level to be a doubling of sound volume. Overall, the noise generated by the proposed Drag Strip and OVH Trail Ride Area would be similar to existing conditions, with exterior noise levels ranging from 50.0 dB(A) to 72.9 dB(A).

Mr. Jason Osborne, on July 18, 2016, presented a critique of the Noise study. His summary was: "The noise study appears to have been conducted in a way that was meant to falsely reduce the effect of the operational noise of the Motorsports Park, thereby making the DEIR claims of "no mitigation necessary" patently false."

Mr. Osborne stated these as conflicts with the Noise study:

-The first and most significant conflict that was apparently ignored in the DEIR, is that the City of Lompoc's 2030 General Plan noise ordinance states quite clearly that the noise generated at a property must meet the defined noise limits **at the noise source property line.**

-policy 1.1 states "The City shall require each land use to maintain noise levels at their property line in compliance with City standards."

Policy 2.3 states "The City shall minimize noise exposure in the vicinity of the Lompoc Airport by maintaining consistency with the adopted Lompoc Airport Master Plan."

Policy 2.4 states "The City shall continue to enforce its Noise Ordinance to minimize noise conflicts between adjacent land uses. The Noise Ordinance establishes noise limits that cannot be exceeded at the property line."

The maximum acceptable noise levels for any source are outlined in Table N-1 as seen below.

Table N-1.
Interior and Exterior Noise Standards

Land Use Categories		Ldn	
Categories	**Uses**	**Interior1**	**Exterior2**
Residential	Single Family, Duplex, Multi-Family, Mobile Home	45[3]	60[4]
Commercial & Industrial	Retail, Restaurant	55	65
	Motel/Hotel	45	60[4]
	Professional Offices, Movie Theater, Auditorium	45	65
	Manufacturing, Utilities, Warehousing, Agriculture	65	75
Community Facility	Hospital, School, Nursing Home, Church, Library, Civic Offices, Parks	45	65
Open Space	Passive Outdoor Recreation	--	60[4]

Notes
1. Interior areas exclude bathrooms, closets, and corridors.
2. Exterior areas are limited to the following: private yards or patios of residential uses; restaurant patios; motel recreation areas; office, theater, or hospital patios or assembly areas; school playgrounds; nursing home, library, or civic office assembly areas; and park picnic areas.
3. If achievement of the interior noise standards requires that windows and doors remain closed, air conditioning or mechanical ventilation is required.
4. In areas affected by aircraft noise, the standard is 65 Ldn with the stipulation that the noise level exclusive of the aircraft-generated noise cannot exceed 60 Ldn.

As can an be seen from one of the sound pressure level simulations contained in the DEIR shown below, the project fails spectacularly at meeting Policy 1.1, well exceeding the 65dB noise limit at the property boundary.

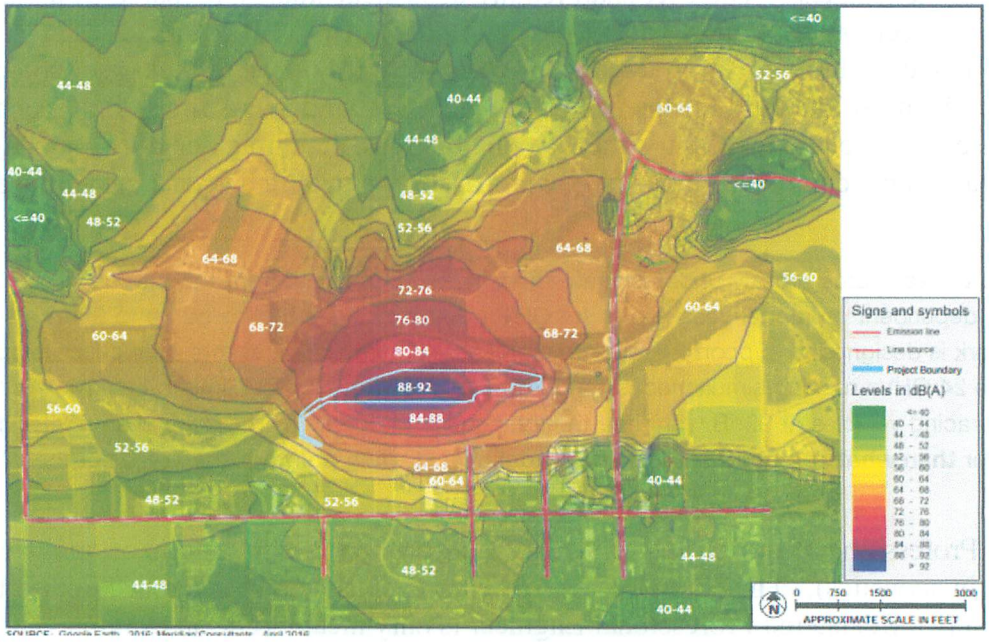

Instead of using the legally required definition of Policy 1.1 above, the authors of the DEIR apply a particularly tortured view of the policy and push the limits for acceptable noise levels by measuring at the nearest property boundary of a "sensitive receptor." Basically they've tried to push the problem as far out as possible to avoid appearing to be in conflict with city policy by claiming that the noise isn't greater than 65dB at the closest neighboring property lines. Even this claim is not correct, as it can be easily seen in their own sound pressure level map above, that noise levels of 64- 68dB extend well into the Purisima Highlands neighborhood."

Mr. Osborne continues with this analysis:

"There is also a continued reference throughout the noise section of the DEIR to the 75dB limit associated with a manufacturing facility as if that 75dB noise limit somehow applies to this proposed park. This proposed location is not zoned as commercial but "PF" for Public Facility, so it still falls under "community facility; park," at a maximum acceptable noise limit of 65dB.

The real kicker here though is "note 4" from 2030 General Plan table N-1 above, which states - "In areas affected by aircraft noise, the standard is 65 Ldn with the stipulation that the noise level exclusive of the aircraft generated noise cannot exceed 60 Ldn" So, even if someone wants to argue that the proposed park is being built at the airport which is already noisy so it shouldn't matter how loud the park is, that's simply not true. The city does recognize that it is noisy there, and as a result, stipulates that no additional noise sources in excess of 60Ldn should be allowed.

Using even the poorly constructed sound level models in the noise study, the proposed park adds a noise source level of 88dB to the area outside of the project property line, which is 28dB above the "noise level exclusive of aircraft." This 28dB increase is almost 700% louder than acceptable according to the 2030 general plan for areas affected by aircraft noise.

To wrap up this "policy section" review of the DEIR noise study, Policy 2.2 of the 2030 General Plan noise element states - "The City shall require acoustical studies, prepared by a qualified acoustical engineer, for new development projects anticipated to either: (1) result in an ambient increase of five dBA Ldn; or (2) produce noise within five dBA/Ldn of the noise standard or greater than the noise standard for the proposed land use(s) under existing or future conditions. Should noise abatement be necessary, the City shall require the implementation of mitigation measures based on a detailed technical study prepared by a qualified acoustical engineer (i.e., a

These sound power estimates grossly underestimate the true noise potential from the proposed park. The California OHV legislation, dependent on model year, allows for OHV exhaust noise output to be up to 96dB - 101dB per OHV. The proposed park is designed to support 24 racing motorcycles in competition events - the effective combined output noise level of the 24 OHVs running simultaneously at 92dB (3dB below the lowest limit to be "nice") is 105.8dB. If you add in two drag racing vehicles at 92dB with that, the total grows to 106dB. This results in a ~13dB difference or well over **100% louder than what has been put into the model as a starting point for the noise sources.**

Registered Professional Engineer in the State of California with a minimum of three years of experience in acoustics)." This may or may not be an issue, since the reference in the above policy of using a Registered Professional Engineer is only meant to be an example of a qualified person that would be able to prepare the noise study. However, the consultants who prepared this study [http://www.meridianconsultantsllc.com/our-team.html] do not have a single acoustical engineer (or any civil engineers) on staff, much less a Registered Professional Engineer according to the above linked online biographies. All of the technical staff of the consultants are trained and certified in some form of Urban Planning/Development and are experienced, so it could be argued that they are qualified to do the acoustic study since a P.E. isn't mandated by the noise policy, but they're not acoustics engineers."

Mr. Osborne's report was posted at this website:

https://4.bp.blogspot.com/-8xaL8mijgr8/V33g8DVM8ZI/AAAAAAAAEOE/B4rPccb5jTQeQYCgVeqwF6rN8wZOJet2QCK4B/s1600/dragOHV.png

This is the description in the Draft EIR of the Noise test of the vehicles, page 4.10-29. Note that the engine sizes, types of vehicles, open or closed exhaust are not mentioned.

The operational noise model for drag strip use is based on pass-by tests conducted utilizing similar vehicles that would be operated during operation of the proposed Project. Four vehicles

OHV measurements

According the DEIR four OHVs were measured to characterize the expected noise outputs of representative vehicles that will be used at the proposed park site. These OHVs are also noted as having met the Off-Highway Motor Vehicle Recreation Act of 2003 legislation for exhaust noise output. What is not defined is exactly what test procedure was used to characterize the noise output, other than a mention of "pass-by runs." The OHV legislation mandates that the exhaust noise measurements be taken 20 inches from the vehicle. With no definition of the actual process used here, it's possible that the data taken from the OHVs in this study were captured a distance greater than 20 inches. The measurement of noise levels has a strong and direct dependence on the distance from the source where the measurements are made. Without this data, it is not possible to know if the vehicles used actually meet the California OHV legislation for exhaust noise, as most vehicles that have had owner modifications done rarely meet the noise standards, and the data are at best poor approximations of what noise levels an OHV at the proposed park creates during operation.

were tested separately for approximately 5 minutes. To simulate drag race conditions, engines were accelerated three times within a 5-minute span to capture peak noise measurements. In addition, two of the louder vehicles were recorded simultaneously during a 5-minute span to capture cumulative worst-case conditions. Those standards and measurements were then programmed into the SoundPLAN modeling system.

The ambient noise levels at surrounding sensitive receptor locations were determined based on measurements obtained with noise meters. The operational noise levels were calculated for sensitive receptor locations using SoundPLAN. Also, the modeling accounts for large differences in topography, and the presence of intervening structures or landscaping that would block a direct line of sight between operation activity from the proposed Project site and nearby homes.

Public Services

Fire Protection and Emergency Services

4.11-1 *Prior to the completion of the off-highway-vehicle (OHV) component, the Applicant shall coordinate with the Lompoc Fire Department to develop and implement an Incident Plan describing the fire inspection and protection services to be provided by the LFD and identifying the number of fire department personnel to be provided, including fire suppression/emergency medical service (EMS), fire prevention (fire inspectors), emergency communications and supervisory personnel. The Incident Plan shall also identify fire suppression equipment, supplies, and other services to be provided by the site operator during future motorsports events, including the number of fire personnel and/or EMS personnel. The site operator shall reimburse the City for fire inspection and protection services provided under the Incident Plan.*

The proposed Project could likely generate an intermittent increase in demand for police services during events held on site as up to 2,620 persons could be onsite. Additional police

services may be required on site for law enforcement, peacekeeping, crowd control, and potentially traffic control on the affected roadways. Accordingly, impacts on the LPD's ability to provide law enforcement services would be potentially significant.

The city should require the Foundation (the developer) to deposit $100,000 in a trust account with the city before approval for construction of the project to assure services such as this are funded. As funds are drawn, the Foundation will required to deposit funds so that the account will have an account balance at or above $100,000. Because this facility is funded with public funds - state grant funds with matching funds required, the city needs to assure the park will be open, staffed with the appropriate number of qualified staff and assure those staff will not be required to assist other situations that may interfere with operation of the park.

or,

Contract with a private security firm for crowd supervision for peacekeeping, internal traffic and parking control and with the fire department on an annual basis for the fire services in the operation of the park. EMS may require full ambulance services during race events.

Traffic and Circulation

4.13-1 *The proposed Project shall contribute its fair share contribution to the City's improvement plan for the Central Avenue/H Street intersection prior to the issuance of building permits. The City identified improvements for the Central Avenue/H Street intersection, including the installation of dual left-turn lanes on the northbound and southbound approaches to the intersection.*

The H Street and Central Avenue intersection is the most congested intersection in the city. This intersection will be an integral area for vehicle and pedestrian traffic with the development of this park. The city should have the plans and the funds in hand before approval of permits to construct the park. That will assure the improvement to this heavily congested intersection, as well any other vehicle and pedestrian situations effected by this project, are addressed to minimize impacts.

4.13-2 *Prior to completion of the Off-Highway Vehicle (OHV) component, the proposed Project applicant shall develop and implement a Traffic and Parking Control Plan for large weekend events (greater than 250 vehicles) that shall include, but not be limited to, detailed provisions for, traveler information, a signage plan, traffic control personnel, entry gate operations, and pedestrians as outlined below. The proposed Project operators shall submit the Traffic and Parking Control Plan to the City Economic Development - Planning Division and the City Police Department for review and approval prior to each event which exceeds 250 vehicles for weekend events. Once developed and implemented, the elements of the Traffic and Parking Control Plan shall be monitored and adjusted accordingly for the various sized events held at the site.*

As stated above, the funds and plans required for this project need to be deposited and submitted with the city before construction begins. This will assure the improvements to the intersections, particularly and H Street and Central Avenue, can begin to counter the impact this project will cause to vehicle traffic and pedestrians.

These are the mitigations proposed in the Draft EIR. These, and possibly other mitigations, should be considered and funding in place prior to issuing permits for the project:

-Traveler Information

The Traffic and Parking Control Plan shall include dissemination of site access and parking information for attendees and participants prior to events. Directions could be provided as part of information mail outs, ticket information, and via a website developed specifically for the Motorsports Park.

-Signage Plan

The Traffic and Parking Control Plan shall include advanced signing within the vicinity of the site to direct traffic to the entry gate prior to events as well as signs to direct traffic leaving the Lompoc area at the end of events. Directional signs shall be provided on SR 1 and on Central Avenue as needed. The signage plan shall include 'No Parking' signs along the segment of V Street between Central Avenue and the proposed Project site in order to minimize congestion and to reduce the number of pedestrians walking along the entry road.

-Traffic Control Personnel

Traffic control personnel shall be placed at on-site and off-site locations to assist with traffic flows at the start and end of events. Traffic control personnel should be provided on-site as necessary to direct vehicles to parking areas prior to events and to provide orderly traffic flows at the end of events. Also, it may be necessary to provide a traffic control officer at the Central Avenue / V Street intersection in order to assist with the flow of vehicles leaving the site at the end of large events.

Entry Gate Operations

The single lane access road can accommodate 250 to 350 vehicles per hour at the control booth for events that require vehicles to stop and pay for parking. It is recommended the operators of large events employ multiple parking cashiers at the entry gate to speed the rate of entering vehicles. Cashiers would walk along the vehicle queue and collect fees prior to the gate, or, the parking fee collection system could be altered to collect fees after vehicles have parked in the parking lots, or, parking fees could be included in event ticket price (and not collected at the entry gate).

Pedestrians

The Traffic and Parking Control Plan shall include provisions to guide pedestrians to safe walking areas within the site during large events.

These conditions need to be in place before permits are approved for construction and the developer needs to agree to these conditions in order to mitigate enforcement and crowd control.

Permitting vehicles to enter without paying at the gate can be problematic. First, operators may not collect the fee, second, there can be dispute as to whether the fee was paid at the gate or previous to the gate, and third, these fees will be needed for the operation and maintenance of the park and this allow the operators to be financially responsible for the management of the park without funding from the city.

Central Avenue/H Street intersection is forecast to operate in the LOS D range during the weekday PM peak hour period with Cumulative and Cumulative plus Project traffic conditions. The Project would add 117 weekday PM peak hour trips to the Central Avenue/H Street intersection is forecast to operate in the LOS D range during the weekday PM peak hour period with Cumulative and Cumulative plus Project traffic conditions. The Project would add 117 weekday PM peak hour trips to the

The Central Avenue and H Street intersection is becoming more impacted with more development in the areas north and west. This project, with the types of vehicles with large trailers, will exacerbate the problem more. For that reason, the site for this proposed Motorsports project will cause more traffic congestion.

The intersections circled in red will be most impacted:

The arrows indicate the approximate area of the drag strip.

Many of the vehicles entering and exiting the Motorsports Park will be vehicles with trailers. <u>The intersection at George Miller Drive has no signal light.</u>

Table 4.13-12
Cumulative plus Project Levels of Service – Weekday PM Peak Hour

Intersection	Cumulative V/C or Delay	Cumulative LOS	Cumulative plus Project V/C or Delay	Cumulative plus Project LOS	Trips	Impact?
SR 1 / Harris Grade Rd. / Purisma Rd.	22.8	C	24.2	C	28	No
SR 1 / George Miller Dr.						
Inbound Lefts	13.8	B	17.3	C		
Outbound Lefts + Rights	23.1	C	21.8	C	145	No
Overall Intersection	18.8	C	18.1	C		
Central Ave. / H Street	38.4	D	40.0	D	117	YES

Source: Associated Transportation Engineers, April 2016.
Note: Bolded values exceed the City's LOS C standard (greater than 35 seconds of delay per vehicle = LOS D)

As show in Table 4.13-12, two of the three study area intersections would operate at LOS C or better under Cumulative and Cumulative plus proposed Project conditions. The Central Ave/H Street intersection is forecast to operate at LOS D under Cumulative and Cumulative plus proposed Project conditions, exceeding the City's LOS C operating standard. The proposed Project would contribute to a potentially significant cumulative impact at this intersection.

In the traffic study is the statement above with emphasis on: "The project would contribute to a potentially significant impact at this intersection" (Central Avenue and H Street).

The proposed mitigation of adding additional turning lanes will not lessen the impacts to this intersection, it may well exacerbate the problem by adding further congestion to the signaled intersection into and out of the Albertson's Shopping Center and all other intersections on Central Avenue to V Street which is the planned main entrance to the park.

Primary access for the proposed Project site during weekday events is proposed via the existing George Miller Drive connection to SR 1. Secondary access (emergency vehicles only) is proposed via the new connection to the north end of V Street. Primary access for large events planned on weekends would be provided via a new roadway connection to the north end of V Street (with emergency access provided by George Miller Drive). As such, there is adequate viewing access and gaps in order for vehicles during the weekday to safely enter and exit the proposed Project site. Larger weekend events could impact circulation system during the proposed Project.

George Miller is a narrow primary road into and out of the airport. It is not good planning to use this road for the Motorsports Park Project. If the project is to be approved, the developers should be required to fund the cost the road at V Street that will allow two way traffic, ample pull off space on each side of the road comply with the mitigations of **4.9–2 in Land Use and Plannning**.

Prior to the use of V Street access way, the developer shall construct a height-restricting barrier over the entry-way to the proposed Project site's access point on "V" Street and the Approach/ Departure Surface are such that it restricts access to vehicles to more than 12 and 1/2 feet including antennas, roof racks and roof top carriers.

As a secondary option to the height-restricting barrier, the Project applicant shall lower the V Street access elevation to 15.5 feet below the existing elevation of the Approach/Departure Surface such that vehicles less than 22.5 feet including antennas, roof racks, and roof top carriers will not penetrate the Approach/Departure Surface.

As discussed above, there is an existing Class I bike path that runs along the west side of SR 1 in the vicinity of the Airport and Class II Bikeways are present on Central Avenue in the vicinity of the proposed Project site. Additionally, sidewalks are provided along H Street and Central Avenue in the Project vicinity. Pedestrian circulation on-site within the drag strip area would be provided via pedestrian paths, a crosswalk, and a future pedestrian bridge. The proposed Project would expand the City's existing pedestrian circulation, thereby allowing the site to be accessed by a system of sidewalks in addition to bike lanes.

This statement is not wholly correct, *"Additionally, sidewalks are provided along H Street and Central Avenue in the Project vicinity."*

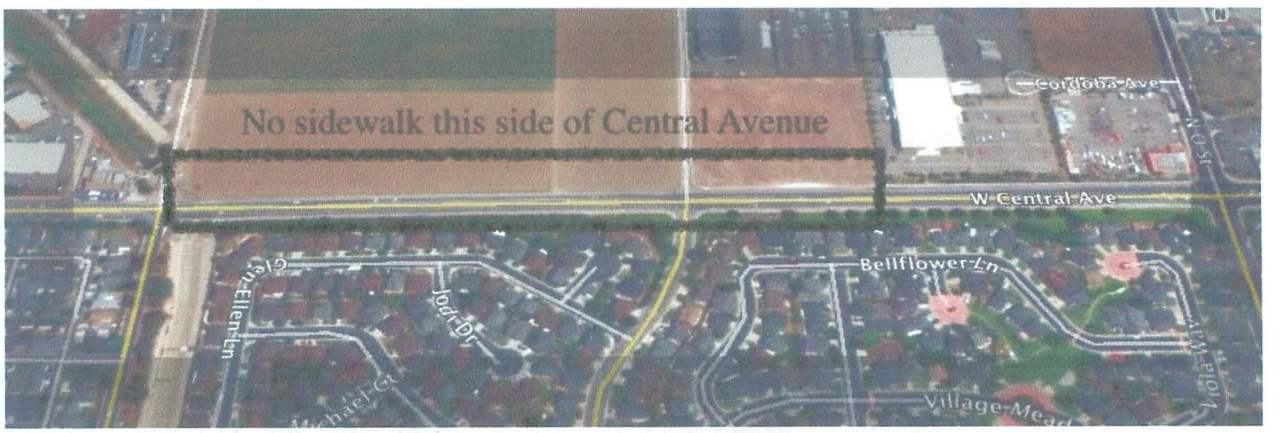

From approximately east of Barton Avenue to V Street, there is no sidewalk to the north side of Central Avenue. Any pedestrian that side of Central Avenue must share the bike path and that is potentially hazardous. With this project, the developer should be required to fund the cost to connect to the existing sidewalk that side of the avenue.

Water Service

A new well would be drilled on the proposed Project site for non-potable water use for dust control during OHV events. Additionally, two fire hydrants are proposed to be constructed on the proposed Project site.

This mitigation conflicts with the city's current policy of conservation and the city raising water rates for 5 years that begun in 2013.

The use of water to control dust on a project of questionable benefit to the city and the airport, appears to be extremely poor planning. This is a waste of a valuable resource and other mitigations should be considered, i.e., wall or berm and/or cover the area to capture and retain dust and other contaminants.

Sewer

Development of the proposed Project is expected to increase demand for wastewater service within the City. However, all wastewater would be contained and removed from the site daily. Restrooms would be provided by portable toilets which would be brought to the site for events and removed as necessary. All wastewater would be collected onsite from restrooms and concessions and trucked off site for disposal. No new or existing sewer lines would need construction as the Project would not be using sewer lines.

Because this project is planned to be permanent at the proposed site at the Lompoc Airport, the operation of that park with portable restrooms will be a continuous management issue. By not having direct water and wastewater lines, this will give this park the appearance of a campground. There is the potential of leakage into the river with portable restrooms and this should be carefully evaluated as to the health and environmental consequences to the river area.

Solid Waste

The project will add additional debris and waste to Lompoc Sanitary Landfill. This is estimated amount in the draft EIR:

....the proposed Project would generate approximately 17.2 tons of construction and demolition debris which would be disposed of at the City of Lompoc Sanitary Landfill.

The operation of the park is estimated to:

.....generate approximately 138.1 tons of solid waste per year, which would be sent directly to the Lompoc Sanitary Landfill.

This essentially counters many years of citizens decreasing waste to the landfill.

How will the developer provide and maintain large waste and recycling containers to be out of sight and preventing the waste from entering the river area?

Dry Utilities

The proposed Project would ..... use 15 55-foot-high light poles ..... on the proposed Project site.

In the event of a flood, how will these lights poles be removed from the floodplain?

In summation, this project will cause impacts of noise, traffic, more people, harm to the river area, additional hazards and distractions to the airport operation, and is questionable as a benefit as a non aeronautical part of airport operations. Although many of the mitigations listed in the report are stated "less than significant," this appears to be questionable with the degree with what is required in the mitigations, i.e., acquisition of land, water retention basins, noise, traffic, lighting, spectators in the sideline of the airport as a hazard, V Street height restriction, the moving of Santa Barbara Skydive's parachute landing area, police and fire service with both departments operating understaffed, and Air Quality "significant and unavoidable for VOC and NOx."

This report has revealed the very real impacts this project will have on this community and for those reasons and possibly many more yet to be identified with the NEPA report, this project should be denied.

MEMORANDUM

RECEIVED

AUG 10 2016

Planning Division

Date: Wednesday, August 10, 2016

To: Lucille Breese, City of Lompoc – Planning Manager

From: E. Steven Nailor, Santa Barbara County, PHD - EHS

RE: Lompoc Motorsports Project – Draft EIR Comments

The Santa Barbara County Public Health Department, Environmental Health Services, Leaking Underground Fuel Tank (LUFT) and Site Mitigation Unit (SMU) appreciates the opportunity to comment on your Draft EIR for the Lompoc Motorsports Project

Based upon our review you have noted that there is the potential for up to four USTs located in the project area.

- You identify that either a geophysical survey or potential grading and excavation activities could have the possibility to uncover any unknown USTs."
- If no UST is found, at a minimum, a Soil Management Plan (SMP) will be prepared with details as how to properly handle and segregate any impacted soil, debris, stained, or odiferous soil that may be encountered, as well as for protection of workers and the public.
- If USTs are discovered you propose to properly permit their removal under permit with EHS' CUPA unit.
- If a release is found to have occurred you propose to undertake assessment and remediation activities under one of EHS' cleanup programs, LUFT or Site Mitigation.

EHS Comments and Requests

1. EHS recommends the EIR be finalized and not left as a "DRAFT."

2. EHS would appreciate the opportunity to review the Soil Management Plan.

3. EHS appreciates your inclusion of potential USTs into the Draft EIR and approves your proposed approaches to finding either existing USTs or contamination from previous USTs or site activities. UST removal soil samples shall be analyzed for the following:
   a. All soil samples shall be analyzed for full range Total Petroleum Hydrocarbons (TPH) from C4 - C40 via EPA Method 8015M. TPH ranges may be broken down per normal procedures for reporting fractions as gasoline, diesel and heavy oils.
   b. All of the soil samples shall further be evaluated for Volatile Organic Compounds (VOCs) via the current EPA Method 8260 series.
   c. A minimum of one soil sample from each UST location shall be analyzed for LUFT Metals (cadmium, chromium, nickel, lead, and zinc)

4. If the initial TPH and VOC sample results indicate a release has occurred; additional assessment will likely be required. Additional analytical testing may be required at that time, which may include other potential compounds of concern, such as testing for SVOCs, Metals, or PAHs. This will be determined if and when releases are found based upon the initial sampling, and or observations.